Pioneer

AUDIO & AV 2023

CAR ENTERTAINMENT

Dealer Guide

Pioneer

AUDIO & AV 2023

CAR ENTERTAINMENT

Dealer Guide

INDEX

AV RECEIVERS

SMARTPHONE RECEIVER

DIGITAL MEDIA RECEIVERS / CD RECEIVERS

SPECIFICATIONS

AMPLIFIERS

SUBWOOFERS & SPEAKERS

MARINE PRODUCTS

RECOMMENDED PRODUCT BUNDLING

SPECIFICATIONS

AV Receivers

AV Receivers All Lineup

Z Series

DMH-ZF9350BT

DMH-ZS9350BT

DMH-Z6350BT

DMH-ZF8550BT

DMH-Z5350BT

AVH-Z9250BT

A Series

DMH-A5450BT

DMH-A4450BT

DMH-AF555BT

DMH-A345BT

DMH-A245BT

AVH-A245BT

G Series

AVH-G225BT

DMH-G225BT

AV Receivers

Z Series

AV RECEIVERS

KEY FEATURES STEP-UP COMPARISON CHART

Z Series

1 / 3

		DMH-ZF9350BT	DMH-ZS9350BT	DMH-Z6350BT	DMH-ZF8550BT	DMH-Z5350BT	AVH-Z9250BT
					New		
Display & User Interface	Screen Size/ Din Size	9" Floating LED HD	9" Separate LED HD	6.8" 2-DIN LED WVGA	9" Floating LED WSVGA	6.8" 2-DIN LED WVGA	7" 2-DIN LED WVGA
	Capacitive & Flat Design	✓	✓	✓	✓	✓	
	Smart UI	Smart UI	Smart UI	Smart UI			
Basic Functions	USB Port*1	rear Type C	rear Type C	rear Type C	rear		rear x 2
	HDMI™	rear Type D	rear Type D	rear Type D			rear
	Preout	3 RCA pre-outs (4V)	3 RCA pre-outs (4V)	3 RCA pre-outs (4V)	3 RCA pre-outs (2V)	3 RCA pre-outs (4V)	3 RCA pre-outs (4V)
	Built-in Digital TV Tuner						
	Rear-View Camera Input*14	Back UP Camera Ready	Back UP Camera Ready	Back UP Camera Ready	Back UP Camera Ready	Back UP Camera Ready	Back UP Camera Ready
	USB Quick Charge for Smartphones	3.0A USB QUICK CHARGE *15	3.0A USB QUICK CHARGE *15	3.0A USB QUICK CHARGE *15	1.5A USB QUICK CHARGE *15	1.5A USB QUICK CHARGE *16	Android *17

*1. Pioneer cannot guarantee compatibility with all USB mass storage devices and assumes no responsibility for any loss of data on media players, smart phones, or other devices while using receiver.
*2. Availability of Amazon Alexa may vary depending upon your country.
*3. Apple CarPlay requires Lightning to USB cable. For availability in your country, please visit http://www.apple.com/ios/carplay/

*4. CD-IU52 required (sold separately).

AV RECEIVERS

KEY FEATURES STEP-UP COMPARISON CHART

Z Series

2 / 3

		DMH-ZF9350BT	DMH-ZS9350BT	DMH-Z6350BT	DMH-ZF8550BT	DMH-Z5350BT	AVH-Z9250BT
					New		
Connectivity	Apple CarPlay Compatible*3	Works with Apple CarPlay Wireless and wired *4	Works with Apple CarPlay Wireless and wired *4	Works with Apple CarPlay Wireless and wired *4	Works with Apple CarPlay Wireless and wired *4	Works with Apple CarPlay Wired *4	Works with Apple CarPlay Wireless and wired *4
	Android Auto Compatible*5	works with androidauto Wireless and wired *6*7	works with androidauto Wireless and wired *6*7	works with androidauto Wireless and wired *6*7	works with androidauto Wireless and wired *6*7	works with androidauto Wired *4	works with androidauto Wireless and wired *6*7
	Amazon Alexa Compatible*2	alexa built-in	alexa built-in	alexa built-in			
	WebLink®*10				WebLink.	WebLink.	WebLink.
	Smartphone *8 Mirroring				WebLink® Cast		Android *9
	CarAVAssist App				*Only support Weather update.		
	Wi-Fi Connection	Wi Fi CERTIFIED	Wi Fi CERTIFIED	Wi Fi CERTIFIED	Wi Fi CERTIFIED		Wi Fi CERTIFIED
	Built-in Bluetooth*12	Bluetooth HFP A2DP AVRCP SPP	Bluetooth HFP A2DP AVRCP SPP	Bluetooth HFP A2DP AVRCP SPP	Bluetooth HFP A2DP AVRCP SPP	Bluetooth HFP A2DP AVRCP SPP	Bluetooth HFP A2DP AVRCP SPP

*5. Availability of Android Auto and Android Auto Wireless may vary depending upon your country and phone model. Please visit android.com/auto for more information.
*6. CD-MU200, CD-CU50 or CD-CCU500 required (sold separately).
*7. Not all Android phones are compatible.
*8. Touch operation differs among compatible smartphones.
*9. Not all Android phones are compatible.
*10. Optional cable required when WebLink is in use.
*11. Optional cable required.
*12. HFP = Hands-Free Profile, A2DP = Advanced Audio Distribution Profile, AVRCP = Audio/Video Remote Control Profile, SPP = Serial Port Profile.
Please refer to instruction manual for other information about profile compatibility.

AV RECEIVERS

KEY FEATURES STEP-UP COMPARISON CHART

Z Series

3 / 3

		DMH-ZF9350BT	DMH-ZS9350BT	DMH-Z6350BT	DMH-ZF8550BT	DMH-Z5350BT	AVH-Z9250BT
					New		
Audio/Video	Display Panel	24-bit True Color	24-bit True Color	24-bit True Color	24-bit color display	24-bit True Color	24-bit True Color
	Video Codec	DivX WMV MP4 H.264	DivX WMV MP4 H.264	DivX WMV MP4 H.264	DivX WMV MP4 H.264	DivX WMV MP4 H.264	DivX WMV MP4 H.264
	Time Alignment/Equalizer	Manual 13 BAND	Manual 13 BAND	Manual 13 BAND	Manual 13 BAND	Auto *13 13 BAND	Auto *13 13 BAND
	Audio Codec	MP3 WMA AAC WAV FLAC	MP3 WMA AAC WAV FLAC	MP3 WMA AAC WAV FLAC	MP3 WMA AAC WAV FLAC	MP3 WMA AAC WAV FLAC	MP3 WMA AAC WAV FLAC
	Dynamic Bass Enhancer	BASS	BASS	BASS			
	Master Sound Reviver	MASTER SOUND REVIVER	MASTER SOUND REVIVER	MASTER SOUND REVIVER			
	CD-R/CD-RW/VIDEO CD/DVD-R/DVD-RW/ DVD-VIDEO playback						DVD-R/RW CD-R/RW

*13. CD-MC20 required. *14. Use input only for reverse or mirror image rear view camera. Other use may result in injury or damage.
*15. Android: Compatible with Type C connection (when connected without conversion). iPhone: Compatible with iPhone 8 or later; Type C lightning cable connects directly.
*16. 1.5 A quick charging is available for iPhone 6 or later models.
*17. USB port 1 and/or USB port 2 can be used for iPhone recharging under the following conditions: 1 A charging is available for iPhone 5s or earlier models. 1.5 A quick charging is available for iPhone 6 or later models. 500 mA charging is available via USB port 1, and 1.5 A quick charging is available via USB port 2 for Android phones.

Over-The-Air Firmware Updates

DMH-ZS9350BT

DMH-ZF9350BT

DMH-Z6350BT

Over-The-Air (OTA) Firmware Updates

Pioneer delivers its first feature-driven "Over The Air" software update for the following models.
Over-the-Air updates will provide your Pioneer in-dash receiver with the latest up to date firmware and feature updates using the CarAVAssist app.

■ **Major Features Available via OTA Firmware Updating**

Models	Common	Large display models only
DMH-ZS9350BT **DMH-ZF9350BT**	• Receiver Internet Access (See another pages for details) • Additional Widget size option • Inversion of L/R images of Back-up camera (2nd camera only) • Bug fixes	• Split screen for Apple CarPlay (See another pages for details)
DMH-Z6350BT		

Latest production includes the above features originally. Please check your radio's behavior in advance.
OTA update requires Car AVAssist app and Wi-Fi environment.
In case you have difficulty of Wi-Fi connection, still possible to update via conventional way of USB pendrive. Please contact with Pioneer Customer Support Center in your area.

Split Screen for Apple CarPlay

DMH-ZS9350BT DMH-ZF9350BT NEW

You can now display Apple CarPlay and the Receiver's menu at the same time on one screen.

Split Screen Mode

Apple CarPlay's UI

Pioneer's UI

Split Screen for Apple CarPlay

DMH-ZS9350BT DMH-ZF9350BT NEW

Pioneer delivers its first feature-driven "Over The Air" software update for the following models.
Over-the-Air updates will provide your Pioneer in-dash receiver with the latest up to date firmware and feature updates using the CarAVAssist app.

Switch key
for the screen view
(Full ⇆ Split)

Source key
for the receiver
(Radio, USB, etc.)

Seamless Operation for Various Functions on the Same Screen

even without exiting CarPlay, you can operate other sources from the receiver.

Receiver Internet Access (RIA) NEW

A new feature of Car AVAssist app to connect Internet automatically with easy set-up.

Without RIA
(Before OTA2 update)

Necessary smartphone settings

Every time manually

With RIA
(After OTA2 update)

Connect automatically!

Easy access to Alexa or browsing

DMH-ZF9350BT

Remote Control Included

Floating Type 1-DIN Multimedia AV Receiver with 9" Capacitive HD Touchscreen Display, Built-in Wi-Fi, Amazon Alexa, Apple CarPlay, Android Auto, Built-in Bluetooth® and Full HD Video Playback from USB Device

alexa built-in · Works with Apple CarPlay · works with androidauto · Wi Fi CERTIFIED · HDMI · Bluetooth · Hi-Res AUDIO · 3.0A USB QUICK CHARGE · HD · Steering Wheel Control Ready · CUSTOM WALLPAPER · flac · USB · 3 RCA pre-outs · Hi-VOLT · Specialized Audio Parts · Back UP Camera Ready

Note: Bluetooth® Mic included. Amazon, Alexa and all related logos are trademarks of Amazon.com, Inc. or its affiliates. Alexa is not available in all languages and countries.

Rear Panel

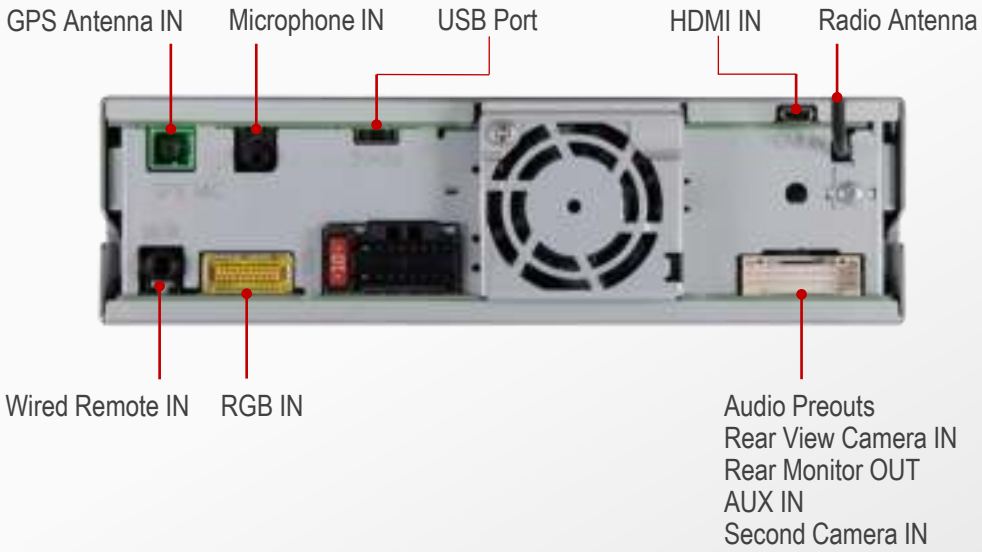

Dimensions

Unit: mm

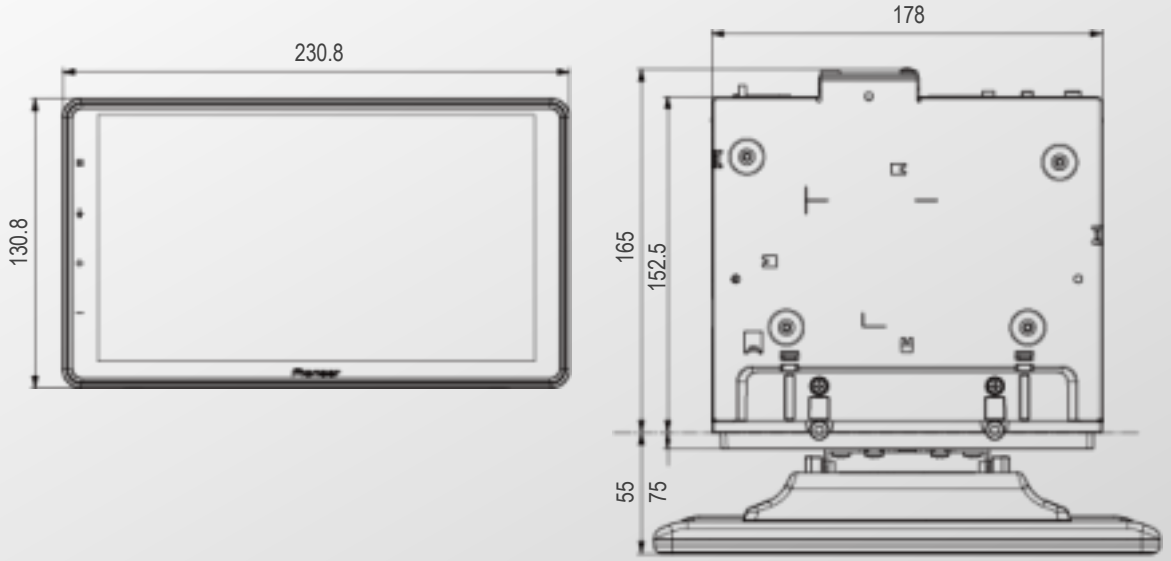

Key Selling Points

DMH-ZF9350BT

1. Compatible with Amazon Alexa, Apple CarPlay and Android Auto.
2. Web Browsing, Streaming video/music, Real-time information (e.g. Sports games) thanks to Wi-Fi connection and CarAVAssist app.
3. Superior in-car AV performance with Master Sound Reviver, Hi Res Audio and Full HD video playback via USB.

Dynamic Large 9" Capacitive Type Display

Large 9-inch screen provides an expansive viewing experience that makes map reading safer and easier. What's more, the highly responsive capacitive-sensing touch panel enables smoother and easier operation.

Floating Display Ensures Easy Monitor Position Adjustment

The display position can be adjusted up/down, left/right and fore/aft, as well as tilted for a better viewing angle. You can adjust the monitor to just the right position according to your needs and the car's interior design.

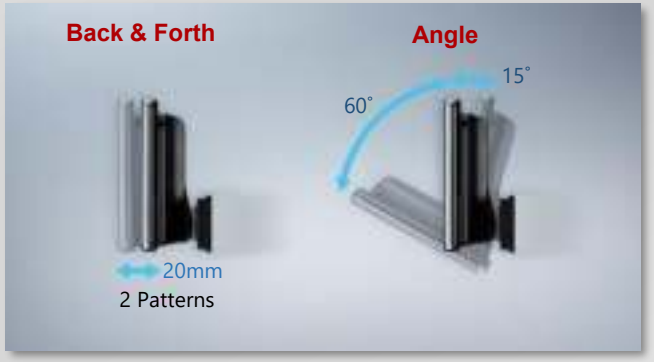

DMH-ZS9350BT

Non-DIN Separate Type Multimedia AV Receiver with 9" Capacitive HD Touchscreen Display, Built-in Wi-Fi, Amazon Alexa, Apple CarPlay, Android Auto, Built-in Bluetooth® and Full HD Video Playback from USB Device

Remote Control Included

alexa built-in · Works with Apple CarPlay · androidauto · Wi-Fi CERTIFIED · HDMI · Bluetooth · Hi-Res AUDIO · 3.0A USB QUICK CHARGE · HD · flac · USB · 3 RCA · Hi-VOLT · Back UP Camera

Rear Panel

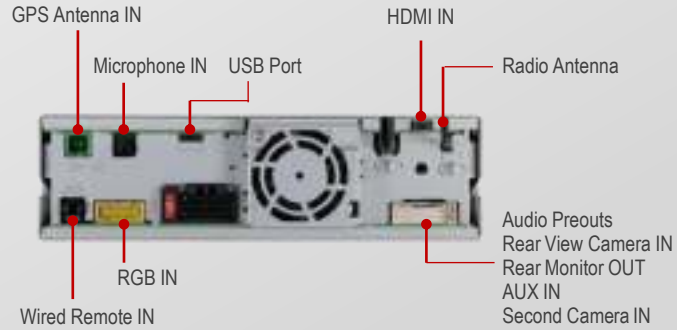

Note: Bluetooth® Mic included. Amazon, Alexa and all related logos are trademarks of Amazon.com, Inc. or its affiliates. Alexa is not available in all languages and countries.

Key Selling Points

1. Compatible with Amazon Alexa, Apple CarPlay and Android Auto.
2. Web Browsing, Streaming video · music, Real-time information (e.g. Sports games) thanks to Wi- Fi connection and CarAVAssist app.
3. Superior in-car AV performance with Master Sound Reviver, Hi Res Audio and Full HD video playback via USB.

Dynamic Large 9" Capacitive Type Display

Large 9-inch screen provides an expansive viewing experience that makes map reading safer and easier. What's more, the highly responsive capacitive-sensing touch panel enables smoother and easier operation.

Flexible Mounting

New mechanical design allows the panel to be installed separately from the main unit, expanding your options for installation.

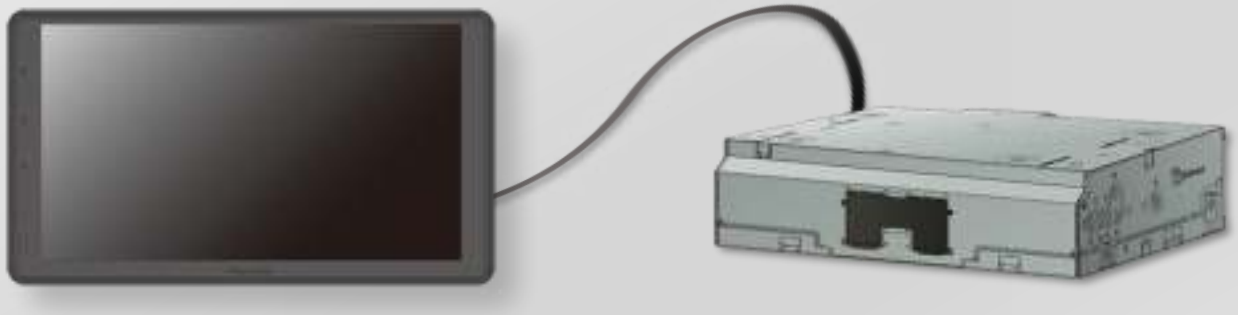

DMH-Z6350BT

In-Dash Double-DIN Multimedia AV Receiver with Short Chassis and 6.8" Capacitive WVGA Touchscreen Display, Built-in Wi-Fi, Amazon Alexa, Apple CarPlay, Android Auto, Built-in Bluetooth® and Full HD Video Playback from USB Device

Remote Control Included

Rear Panel

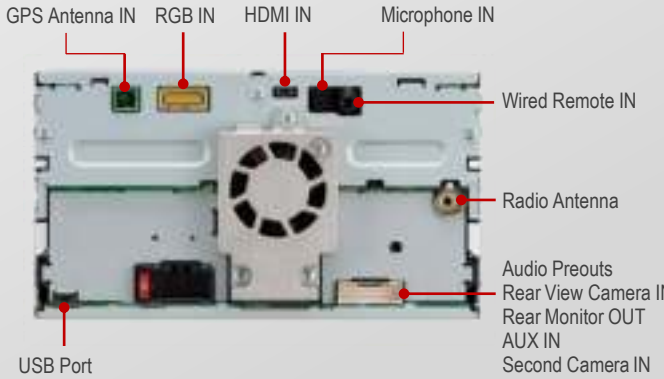

Note: Amazon, Alexa and all related logos are trademarks of Amazon.com, Inc. or its affiliates. Alexa is not available in all languages and countries.

Key Selling Points

1. Compatible with Amazon Alexa, Apple CarPlay and Android Auto.
2. Web Browsing, Streaming video · music, Real-time information (e.g. Sports games) thanks to Wi- Fi connection and CarAVAssist app.
3. Superior in-car AV performance with Master Sound Reviver, Hi Res Audio and Full HD video playback via USB.

Apple CarPlay Wired & Wireless

Apple CarPlay is a smarter, safer way to use your iPhone while you drive. And now with an all new Apple CarPlay Dashboard that helps you with tunes, turns, and Siri suggestions, a Calendar app that lets you view and manage your day, and maps that reveal more of what's around you, getting there just got a whole lot easier. And a lot more fun. The popular applications like Waze are supported.

Apple CarPlay requires iPhone 5 or newer with the latest version of iOS. Either "Made for iPod" or "Made for iPhone" means that an electronic accessory has been designed to connect specifically to iPod or iPhone and has been certified by the developer to meet Apple performance standards. Apple is not responsible for the operation of this device or its compliance with safety and regulatory standards. Operations and functions may vary depending on iOS device or receivers.
Note: For availability in your country, please visit http://www.apple.com/ios/carplay

Android Auto™ Wired & Wireless

Android Auto extends the Android™ platform into the car in a way that's purpose-built for driving. Android Auto automatically brings you useful information and organizes into simple cards that appear just when they're needed. It's designed to minimize distraction so you can stay focused on the road ahead. You can use the popular application like Waze.

Android Auto Wireless or Android Auto may not be available on all devices. Android Auto requires the Android Auto app on Google Play. To wirelessly use Android Auto on your car display, you need a compatible Android smartphone with an active data plan. You can check which smartphones are compatible at g.co/androidauto/requirements.

Standard text messaging rates apply. Visit support. google.com/android auto for more information.

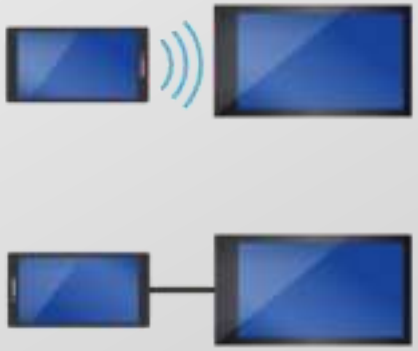

CarAVAssist App

CarAVAssist App supports web browsing, home screen customization and other functions.
You can bookmark websites that you want to enjoy in your car, register your favorite sports teams to receive real-time game updates, make notification settings for your smartphone, and more. The app also allows you to customize your receiver's home screen, including adding your own background image, and easily perform OTA Firmware updates.

CarAVAssist
(iOS/Android)

Download Now!

Download on the App Store

GET IT ON Google Play

Register your favorite sports teams

Use a favorite photo for your home screen background

Apply bookmarks on your smartphone to the receiver

You can view any bookmarked sites on the receiver display.
Stream music and videos easily!

Streaming Audio/Video and Web Browsing

Wi-Fi connection is possible by tethering your smartphone or using a Wi-Fi router, which will allow you to stream videos and music, and by registering your favorite sports team, to display game scores in real time. Web browsing is also available.

Note: Some browsers may not be able to display some web pages or play some types of video and audio.

Real-Time Information

You can easily access live information including sports, weather and more.

Alexa Built-in*

You can talk to Alexa on the receiver. With Alexa Built-in, you can ask to play music, place calls, listen to audiobooks, hear the news, check the weather, control smart home devices and more — all while you keep your hands on the wheel and eyes on the road.

* This service requires internet access.
Amazon, Alexa and all related logos are trademarks of Amazon.com, Inc. or its affiliates.
Alexa is not available in all languages and countries.
Certain Alexa functionality is dependent on smart home technology.

Smart UI

New Smart UI allows you to customize the widgets and icons on the home screen more freely than before. Now you can swipe up, down, left and right to view information just as you would on your smartphone. Also, you have immediate access to weather forecasts, real-time sports updates on your favorite teams, your favorite radio stations, and even email notifications and messages sent to your smartphone.

Parking Assist Guidelines

When you shift the vehicle into reverse, parking assist guidelines appear in the display for convenient parking guidance.

Different from the actual illustrations

Rear view camera

Dual Camera Inputs Ready

Dual camera inputs enable you to add a reverse (rear facing) camera* and front facing camera* that can assist with front and rear visibility, towing, or parking.

* Camera is optional.

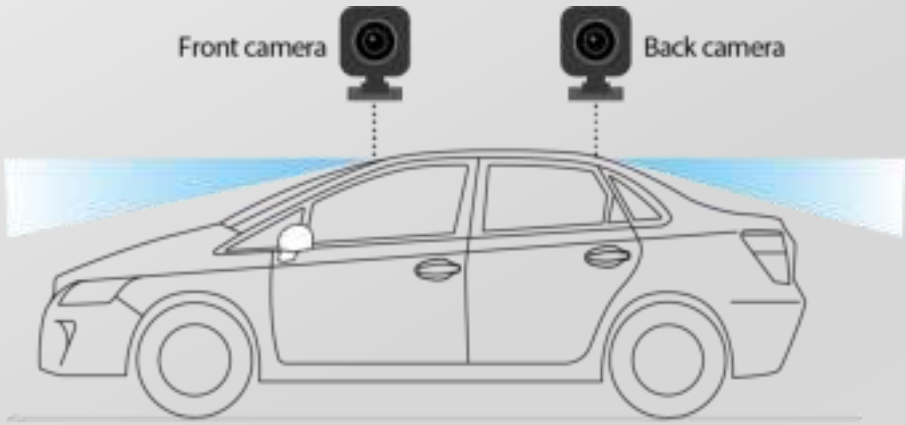

SOUND TECHNOLOGY

A variety of technologies are incorporated to deliver high quality sound in your car space.
Enjoy any kind of in-car entertainment to the fullest with clear and dynamic sound.

Hi-Res AUDIO

MASTER SOUND REVIVER

Hi-Res Audio Support

Fully reproduces high-resolution sound source data, realizing the super-realistic sound that Pioneer strives to achieve.

Master Sound Reviver

Original Pioneer technology effectively removes the quantization noise that occurs in the audible band when playing CD or other compressed audio sources. Together with Pioneer's unique harmonic generation technology, which faithfully restores the music signal above the audible band lost during CD master recording, the resulting sound information is comparable to a high-resolution sound source. Far exceeding the sound quality of a CD or other compressed sound source, the result is high-quality, natural sound reproduction.

More details on next page

Image of frequency band extension and quantization bit depth extension

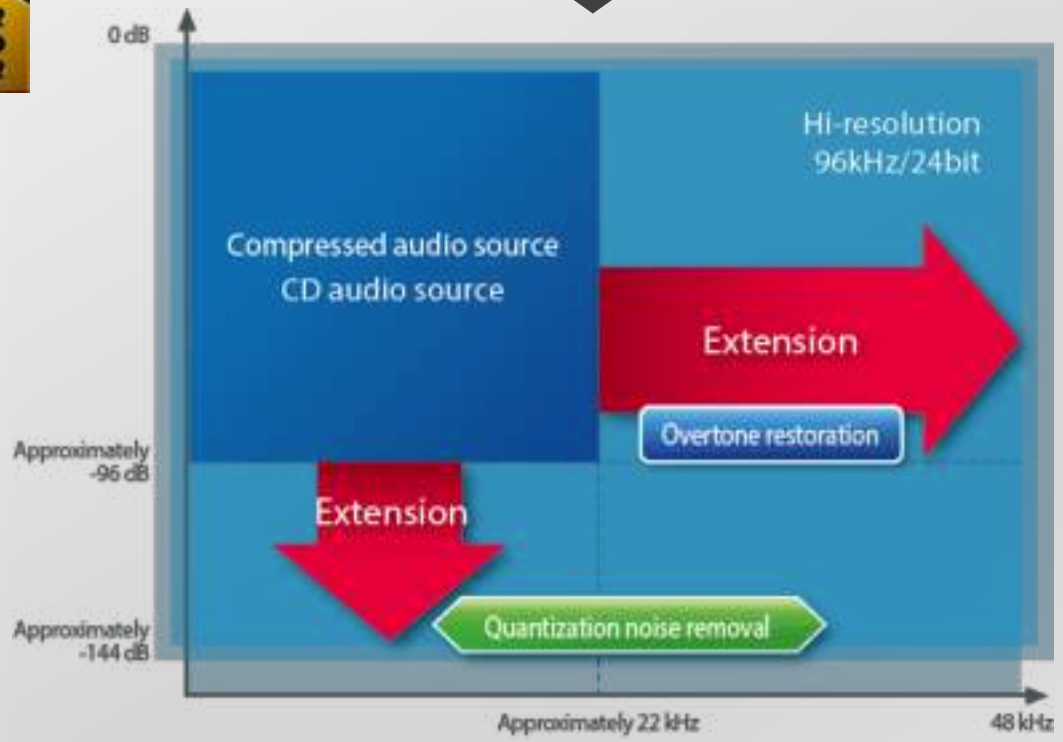

High-frequency generation true to the original sound

■ CD audio source

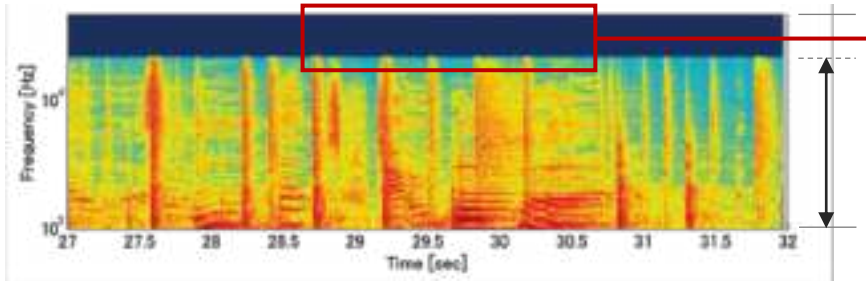

Frequency band recorded on CD
[0 – approx. 22kHz]

During CD mastering, high frequency components of around 22kHz or higher are cut by downsampling to (Fs): 44.1kHz.

■ MSR

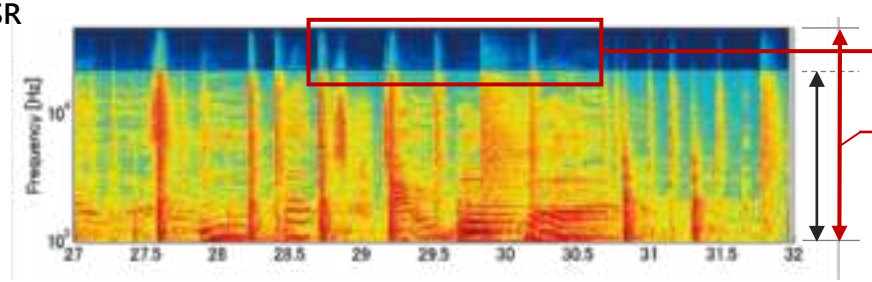

MSR frequency band extension
[0 – 48kHz]

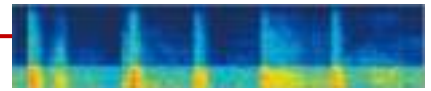

MSR expands the frequency band by adding harmonic components that are true to the original sound and by restoring natural high-frequency components.

MASTER SOUND REVIVER

Quantization noise removal

Improved small signal reproduction

CD audio source

MSR

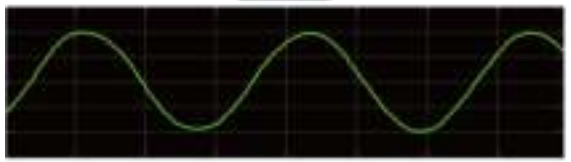

Restores clean and smooth audio signal

CD audio source

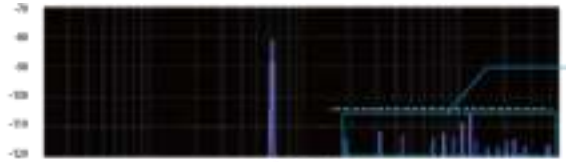

Quantization noise

MSR

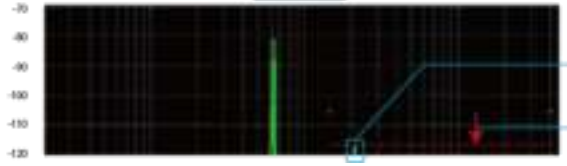

Quantization noise

Improved S/N ratio

Improved S/N ratio and expanded dynamic range by removing quantization noise

Dynamic Bass Enhancer

Pioneer Audio Receivers enrich bass depth and use Pioneer original technology to provide more dynamic, punchy sound.

■ Reproduction of Missing Fundamentals

The unique audio processing restores fundamental qualities that may be missing from the original sound, allowing you to hear bass sound quality that surpasses the depths of low-frequency sound that speakers can actually emit. From even small speakers, you can feel the impression of heavy bass that you typically hear from larger speakers.

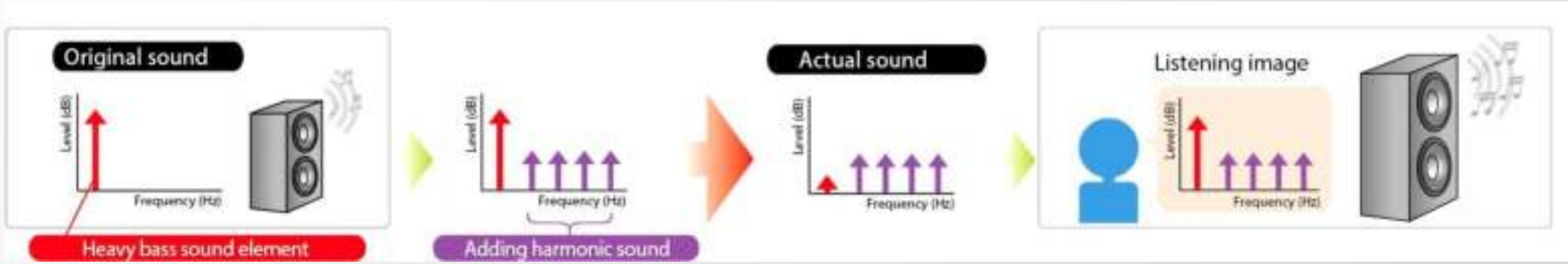

■ Emphasizing Kick Sound

By increasing specific amplitude, you can experience the kick sound sensation of punchy beat.

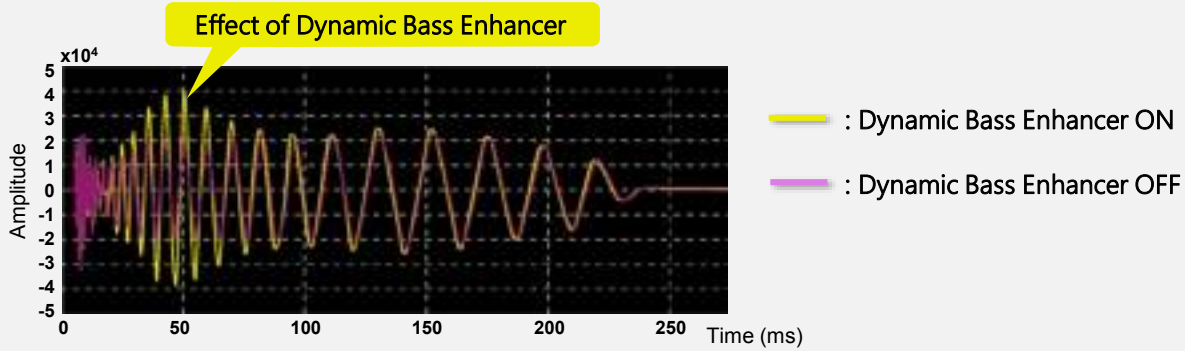

Specialized Audio Parts and Professional Tuning

A Complete Redesign of Refined Sound Quality

PMLCAP (Polymer Multi-Layer Capacitor)

The adopted PMLCAP generates sound of resonance and reverberation among midrange frequencies that are easiest to hear.

Low Impedance Parts

Use of low impedance parts helps to reduce noise in power supply.

24-bit True Color Panel

New AV receiver displays are capable of 24-bit True Color reproduction of up to 16,777,216 colors, so they can achieve as much as about 256 times a conventional display's color depth.

Distinctive Color in Detail

Full HD Video from USB Devices

New AV receivers can play Full HD (1080p) video from files encoded in various digital formats that are stored in your easy-to-connect USB devices.

Compatible Codec* with USB Device

Codec	Extension	
VC-1	.wmv/.asf	1920 x 1080/45 Mbps
H.264	.mp4/.mkv/.mov/.flv/.avi/.m4v	1920 x 1080/40 Mbps
H.263	.mp4/.mov/.avi/.m4v	1920 x 1080/20 Mbps
MPEG-4	.mp4/.mkv/.mov/.avi/.divx/.m4v	1920 x 1080/40 Mbps
MPEG-2**	.mpeg/.mpg/.ts	720 x 576/40 Mbps
DivX®**	.avi/.divx	720 x 576/40 Mbps

* Playback capability for various content may change.
** Not compatible with Full HD playback.

DMH-ZF8550BT

9" Floating

Floating Type 1-DIN Multimedia AV Receiver

9" Capacitive WSVGA Touchscreen Display, Built-in Wi-Fi,
Wireless & Wired Apple CarPlay , Wireless & Wired Android Auto, WebLink®, WebLink® Cast,
Built-in Bluetooth®, Full HD Video Playback from USB Device

Works with Apple CarPlay
works with androidauto
Wi Fi CERTIFIED
WebLink. WebLink® Cast
Bluetooth
Android 1.5A USB QUICK CHARGE
Steering Wheel Control Ready
CUSTOM WALLPAPER
Full HD 1920 x 1080
flac
USB
Back UP Camera Ready
3 RCA pre-outs

Key Selling Points

1. Large 9''screen with an industry 1st technology*
2. Advanced connectivity with your smartphone
3. High-performance AV features

*After market category as of ''22 Nov'' Pioneer's research

Large 9‘’screen with an industry 1st technology*

Dynamic & Beauty with 9-inch screen

Large 9-inch screen provides an expansive viewing experience that makes map reading easier. Furthermore, the large screen enables powerful and impressive image.

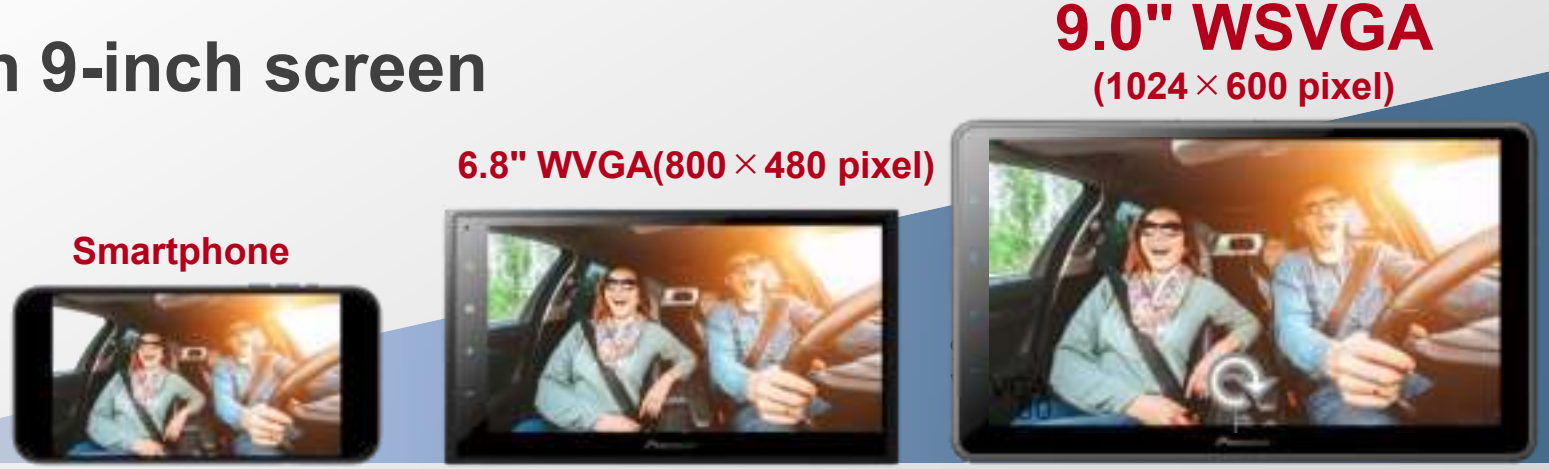

Technologies take advantage of the large screen

Split screen

Industry 1st *

Apple CarPlay+H/U menu

Android Auto +H/U menu

Light Mode

Industry 1st *

*After market category as of ‘’22 Nov’’ Pioneer’s research

Split screen for Apple CarPlay and Android Auto NEW

industry 1st technology!

You can now display Apple CarPlay or Android Auto and the Receiver's menu at the same time on one screen.
This function is useful such as when you want to operate the music (i.e. Radio or USB) while looking at the map screen.

CarPlay's UI

Pioneer's UI

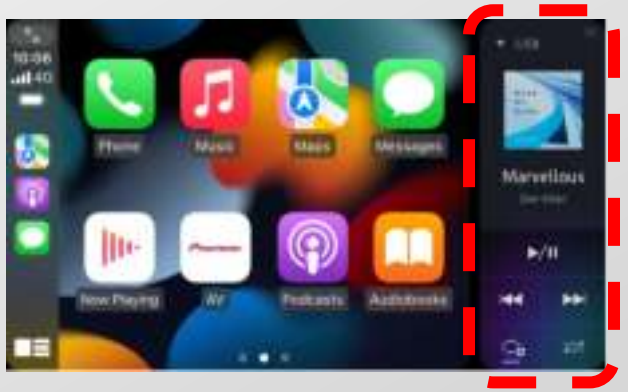

Split screen mode

Android Auto's UI

Pioneer's UI

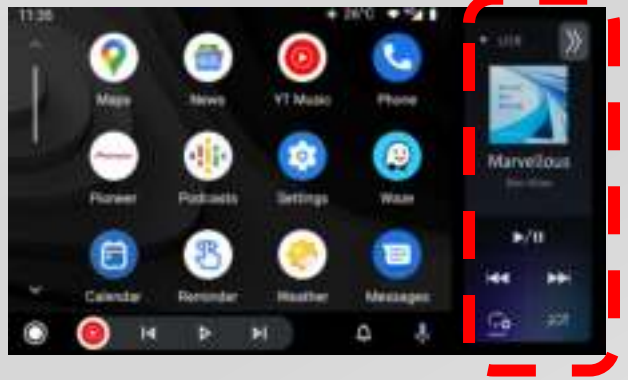

*After market category as of ''22 Nov'' Pioneer's research

Enhanced Visibility with Selectable Viewing Mode

NEW

industry 1st technology!

New features that allow you to switch the mode of the screen to suit your surroundings and preferences.

Dark Mode (Standard Color)

Light Mode (New Color)

Light mode to see easily when screen reflections

Note: Actual information on the screen may vary by region.

*After market category as of ''22 Nov'' Pioneer's research

Install Ability to suit most vehicles

When mounting the display, you can adjust the monitor position according to your needs and the car's interior design.

Floating Installation

In Dash Installation

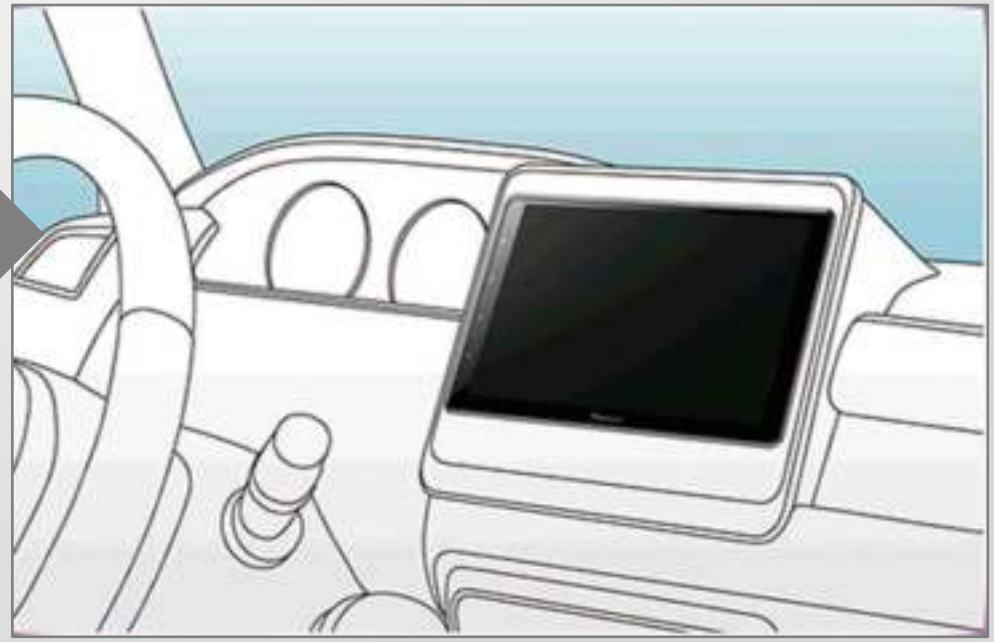

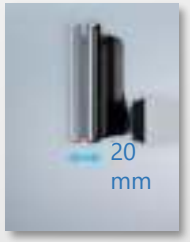

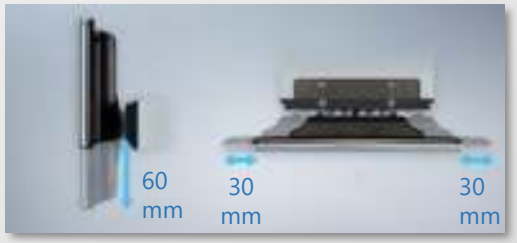

Adjustment

When mounting the display,
you can adjust the monitor position
according to your needs and the
car'sinterior design.

Dimension— Depending on installation style

Floating

Dimensions

Unit: mm

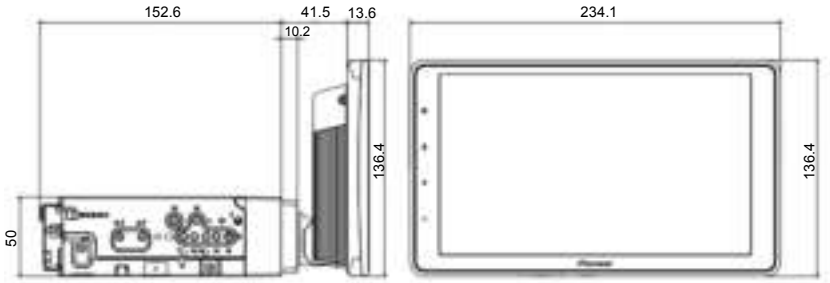

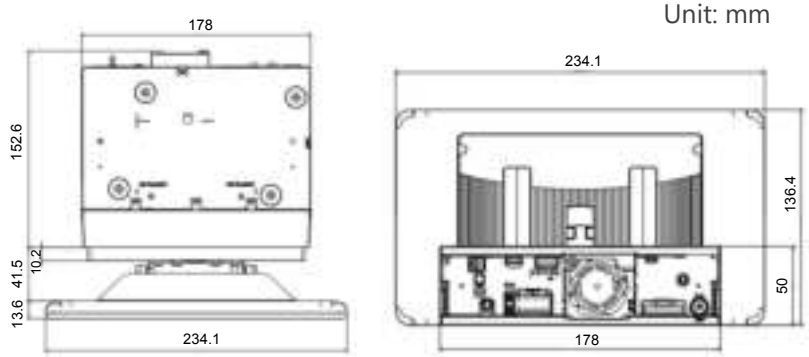

In Dash

Dimensions

Unit: mm

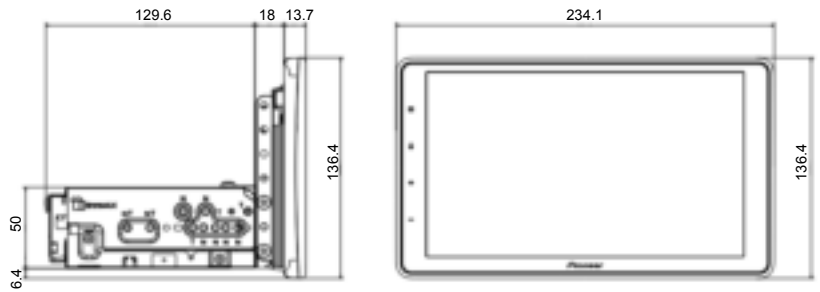

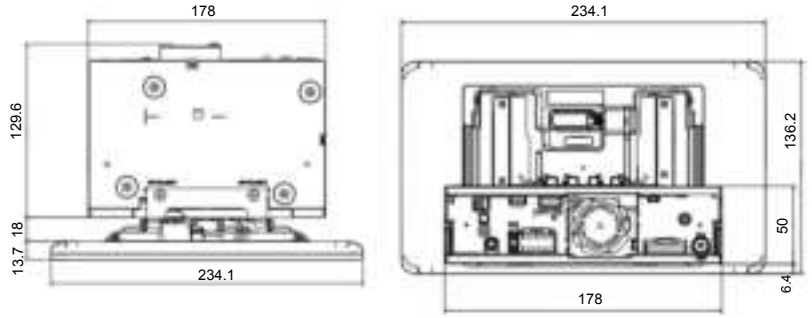

Advanced connectivity with your smartphone

Apple CarPlay Wired & Wireless

Apple CarPlay is a smarter, safer way to use your iPhone while you drive. And now with an all new Apple CarPlay Dashboard that helps you with tunes, turns, and Siri suggestions, a Calendar app that lets you view and manage your day, and maps that reveal more of what's around you, getting there just got a whole lot easier. And a lot more fun. The popular applications like Waze are supported.

Apple CarPlay requires iPhone 5 or newer with the latest version of iOS. Either "Made for iPod" or "Made for iPhone" means that an electronic accessory has been designed to connect specifically to iPod or iPhone and has been certified by the developer to meet Apple performance standards. Apple is not responsible for the operation of this device or its compliance with safety and regulatory standards. Operations and functions may vary depending on iOS device or receivers.
Note: For availability in your country, please visit http://www.apple.com/ios/carplay

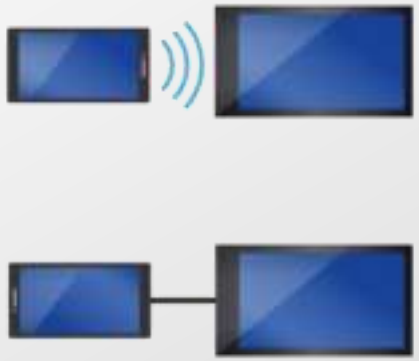

Android Auto™ Wired & Wireless

Android Auto extends the Android™ platform into the car in a way that's purpose-built for driving. Android Auto automatically brings you useful information and organizes into simple cards that appear just when they're needed. It's designed to minimize distraction so you can stay focused on the road ahead. You can use the popular application like Waze.

Android Auto Wireless or Android Auto may not be available on all devices. Android Auto requires the Android Auto app on Google Play. To wirelessly use Android Auto on your car display, you need a compatible Android smartphone with an active data plan. You can check which smartphones are compatible at g.co/androidauto/requirements.

Standard text messaging rates apply. Visit support. google.com/android auto for more information.

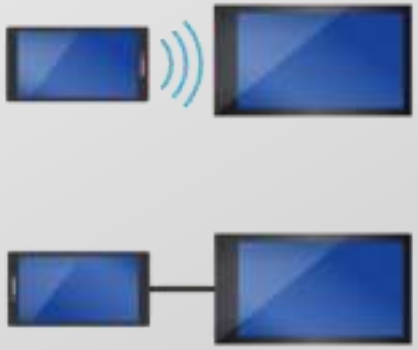

3.WebLink® Cast

The latest version of WebLink (WebLink 2.0) enables smartphone mirroring with touch control on iOS and Android via WebLink Cast app.

■ Procedures

1. Install WebLink Host app to a compatible smartphone (iPhone/Android).
2. Connect the smartphone to a compatible receiver with USB cable.
3. Touch WebLink Host app icon on the receiver screen.
4. Touch WebLink Cast app icon (WebLink 2.0 hardware only).

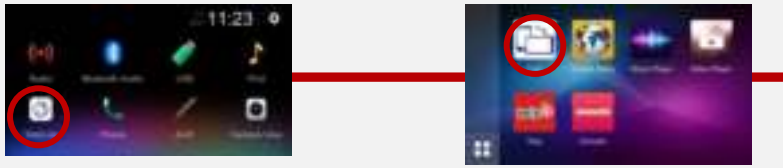

Mirroring various apps on iOS and Android with touch control

WebLink® Cast is a trademark of Abalta Technologies, Inc.

WebLink®

WebLink for Pioneer AV receivers expands in-car entertainment with an amazing world of apps. Enjoy personalized music, videos, and other connected content powered by your phone and the cloud.

Smartphone Minimum Requirements

In order for a smartphone to be compatible with WebLink, it must meet all of the following criteria:

- iOS – Version 14.0 and above is supported on WebLink
*iOS support includes the current major OS version and 1 previous major version.
- Android – Version 7.0 and above on Google certified phones is supported on WebLink.
: https://support.google.com/googleplay/answer/1727131?hl=en
- Phone must have a hardware video decoder
- Minimum CPU: 1.5GHz Dual Core
- Minimum RAM: 2GB

WebLink®

WebLink®

Music Player
Experience smarter and better in-car life by playing the music from your smartphone.

Search and information apps
You can use apps such as Yelp and Zomato directly from the AVH receiver, accessing important information inside your car more safely and conveniently.

Use the FAVORITES button to instantly switch to the content you use most often. With the SEARCH button, you can easily search for content.

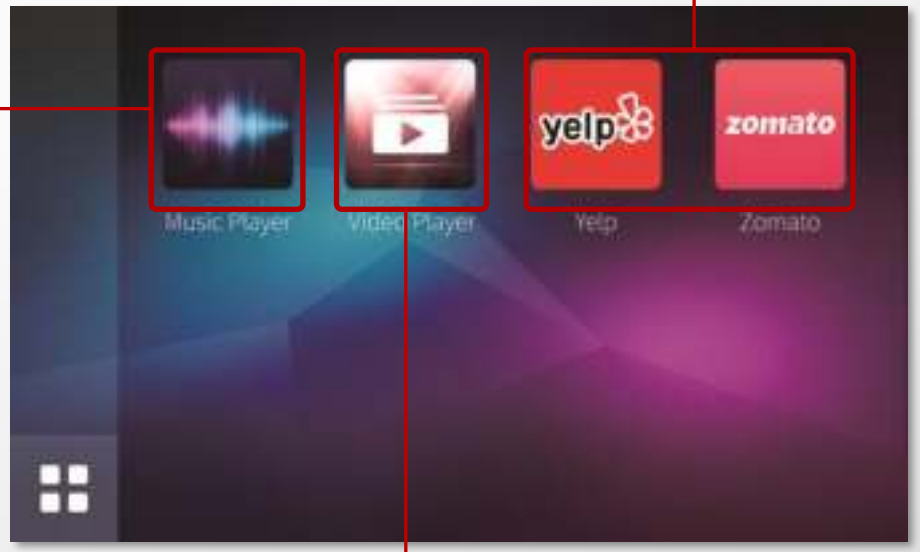

Video playback
WebLink advances your capability to play back video. Watch video stored in a smartphone or streamed through the cloud on the AV receiver's large display.

Simplified design featuring two large control icons ensures easy operation.

WebLink® is a registered trademark of Abalta Technologies, Inc.
Zomato is a trademark of Zomato Pvt Ltd.
Genius Maps is a trademark of Mireo d.d.

CarAVAssist App

CarAVAssist App allow you to do settings on your headunit using your smartphone, and more. It also allow you to perform OTA Firmware updates.

CarAVAssist (iOS/Android)

Download Now!

Download on the App Store

GET IT ON Google Play

	DMH-ZF9350BT	DMH-ZS9350BT	DMH-Z6350BT	DMH-ZF8550BT
Web Browsing	Support	Support	Support	Do not support
Sport Result Update	Support	Support	Support	Do not support
Weather Update	Support	Support	Support	Support
Screen Customization	Support	Support	Support	Support
Notification Setting	Support	Support	Support	Support
Over-The-Air Firmware Update	Support	Support	Support	Support

High-performance AV features

Sound Tuning

Detailed tuning features realize comfortable quality for your time in the car.

Speaker Level Setting

Crossover Setting

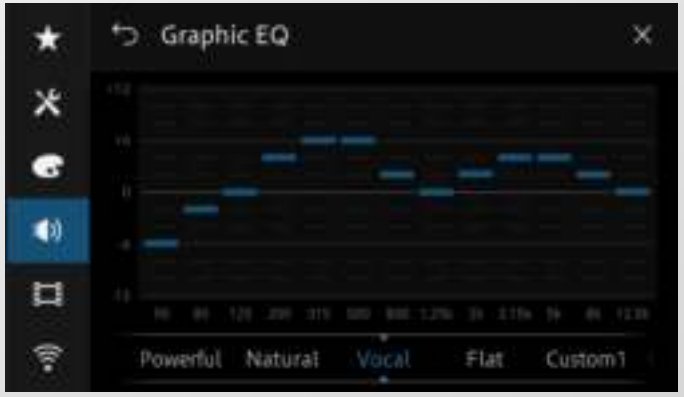

13-Band Graphic EQ

Manual Time Alignment

Utilizing Time Alignment function, you can adjust speaker output timing, so that sound from all speakers reaches the driver's ears in perfect sync.

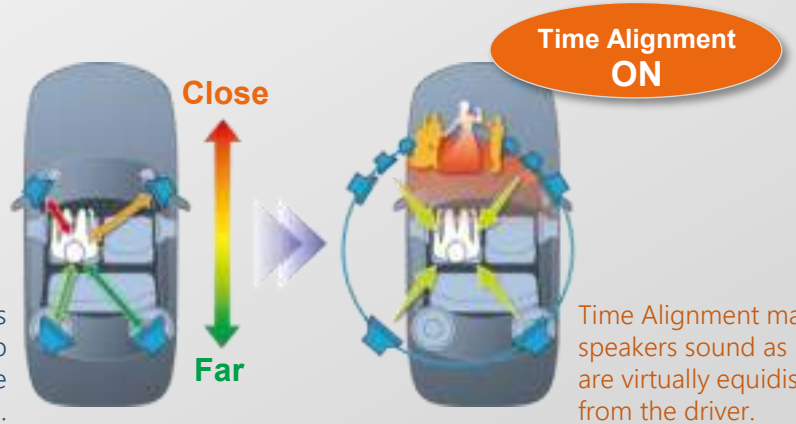

The different distances from each speaker to the driver cause the delay of sound.

Time Alignment makes all speakers sound as if they are virtually equidistant from the driver.

High-performance AV features

A variety of carefully selected parts to achieve high sound quality

We examined the components around the DSP and coupling capacitor and succeeded in stabilizing the shared voltage.

In addition, incidental sound and noise are reduced, and sound with good depth and separation is realized.

Plus, the installation of carefully selected components in the "film capacitor" improves the proposal, creates a sense of reverberation in the midrange, and fills the cabin with a more three-dimensional, core and realistic sound of the vocals.

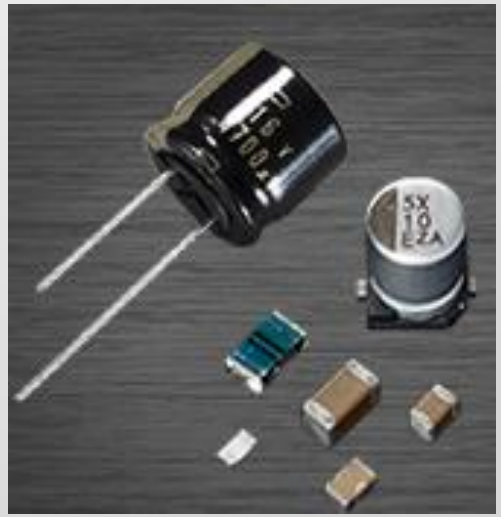

Full HD Video from USB Devices

New AV receivers can play Full HD (1080p) video from files encoded in various digital formats that are stored in your easy-to-connect USB devices.

Compatible Codec* with USB Device

Codec	Extension	Maximum resolution	Maxium frame rate
VC-1	.wmv/.asf./.mkv	1920 × 1080	30fps
H.264	.mp4/.mkv/.mov/.flv/.avi/.m4v/.ts/.m2ts/.mts	1920 × 1080	30fps
H.263	.mp4/.mov/.avi/.m4v/.3gp	1920 × 1080	30fps
MPEG-4	.mp4/.mkv/.mov/.avi/.divx/.m4v/.ts/.m2ts/.mts	1920 × 1080	30fps
MPEG-2	.mpeg/.mpg/.ts/.m2ts/.mts	720 × 576	30fps

** Not compatible with Full HD playback.

Built-in Bluetooth®

File Browsing can be used through AVRCP 1.6 version of Bluetooth.
You can easily search songs in the browsing display.

AVRCP Version 1.6.2

Bluetooth®

USB Quick Charge for Android (CDP)

Pioneer's AV receiver has a charging downstream port (CDP) providing up to 1.5 amperes to give an Android smartphone a quick charge.

Android 1.5A USB QUICK CHARGE

Parking Assist Guidelines

When you shift the vehicle into reverse, parking assist guidelines appear in the display for convenient parking guidance.

Different from the actual illustrations

Rear view camera

AVH-Z9250BT

In-Dash Double-DIN DVD Multimedia AV Receiver with 7" WVGA Touchscreen Display, Built-in Wi-Fi for Apple CarPlay™ wireless and Android Auto Wireless, Dual USB, and SD Card Slot

Remote Control Included

Apple CarPlay · Made for iPhone · androidauto · WebLink · Wireless Mirroring · Bluetooth · HDMI · Dual USB · LED · Multiple Color · Multi-Language Display · flac · Dual Zone · 3 RCA Pre-Out · Hi-VOLT · Detachable Face Security · Back Up Camera

Rear Panel

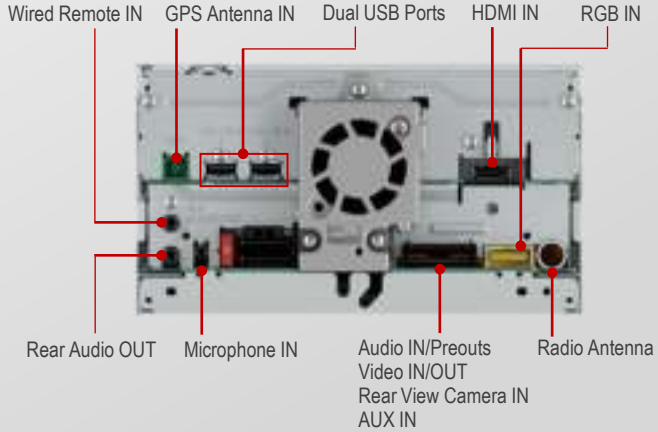

Note: Bluetooth® Mic included. Detachable Face Security for RD/RI models only.

Key Selling Points

1. With built-in Wi-Fi®, you can use Apple CarPlay wireless and Android Auto Wireless – the best means of operating a smartphone through a car entertainment system – without connection cable, for greater freedom from clutter and complication.
2. Through the receiver display, you can seamlessly access various audio and video content stored in a wirelessly connected smartphone by using Wireless Mirroring function.
3. With an HDMI input, Dual USB and SD Card slot, the AVH-Z9250BT offers you easy connectivity and unlimited fun with a wide range of media.

DMH-Z5350BT

Remote Control Included

In-Dash Double-DIN Multimedia AV Receiver with 6.8" Capacitive WVGA, Touchscreen Display, Apple CarPlay, Android Auto, WebLink®, Built-in Bluetooth® and Full HD Video Playback from USB Device

*DMH-Z5350TV incorporates Built-in Digital TV Tuner.

Works with Apple CarPlay

works with androidauto

WebLink

Bluetooth

Full HD 1920 x 1080

Android 1.5A USB QUICK CHARGE

DUAL PHONE CONNECTION

13 BAND EQ

3 WAY NETWORK MODE

USB

3 RCA pre-outs

Hi-VOLT

Steering Wheel Control Ready

Back UP Camera Ready

TV

For DMH-Z5350TV

Note: Bluetooth® Mic included

Rear Panel

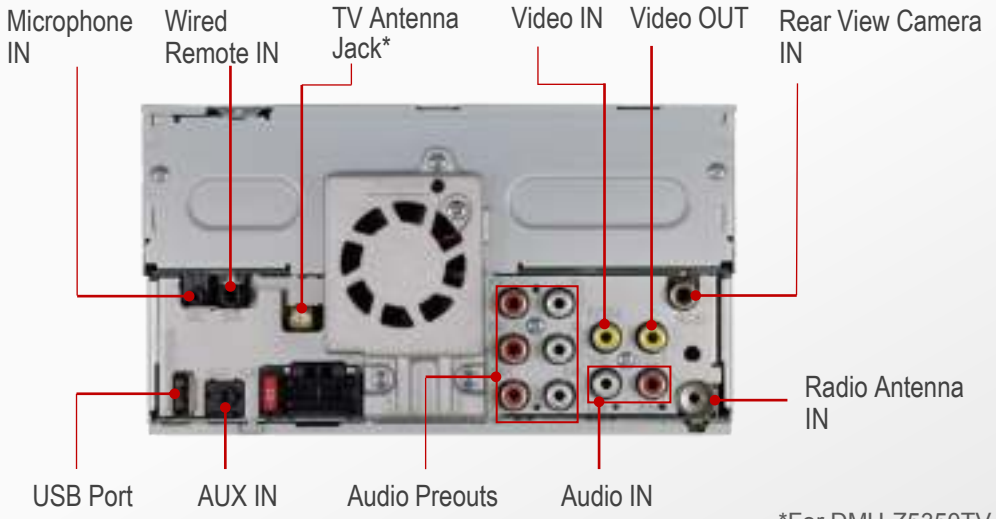

*For DMH-Z5350TV

Dimensions

Unit: mm

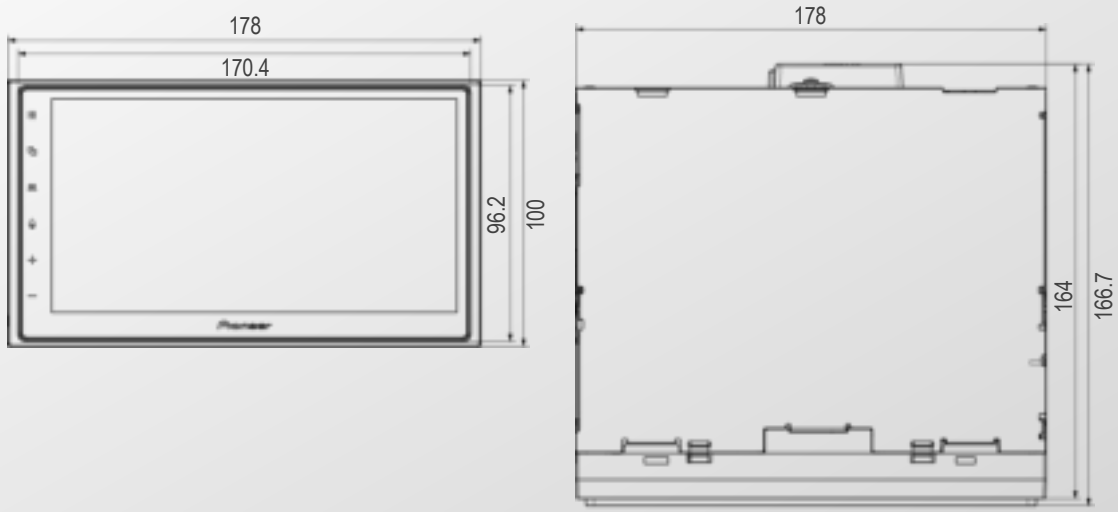

Key Selling Points

DMH-Z5350BT

1. Compatible with Apple CarPlay, Android Auto and WebLink®.
2. Highly responsive and customizable interface gives you easy operation and more engaging user experience.
3. Superior in-car AV performance with 24-bit True Color display panel, Full HD video playback via USB and select Pioneer-tuned audio parts.

Apple CarPlay*

Apple CarPlay is a smarter, safer way to use your iPhone while you drive. And now with an all new Apple CarPlay Dashboard that helps you with tunes, turns, and Siri suggestions, a Calendar app that lets you view and manage your day, and maps that reveal more of what's around you, getting there just got a whole lot easier. And a lot more fun. The popular applications like Waze are supported.

* Apple CarPlay is available on Apple iPhone 5 or later with iOS 7.1.2 or higher, and requires Lightning to USB cable. Some phones may not compatible with this product. Please contact the local distributor for details.

Note: For availability in your country, please visit http://www.apple.com/ios/carplay

Android Auto™*

Android Auto extends the Android™ platform into the car in a way that's purpose-built for driving. Android Auto automatically brings you useful information and organizes into simple cards that appear just when they're needed. It's designed to minimize distraction so you can stay focused on the road ahead. You can use the popular application like Waze.

* To use Android Auto on your car display, you'll need an Android phone running Android 6.0 Marshmallow, an active data plan, and the Android Auto app.

Note: Availability of Android Auto may vary depends on your country and phone model, Please visit https://www.android.com/auto/ for more information. Some phones may not compatible with this product. Please contact the local distributor for details.

WebLink®

WebLink® for Pioneer AV receivers expands in-car entertainment with an amazing world of apps. Enjoy personalized music, videos, and other connected content powered by your phone and the cloud.

More Connectivity

USB Type-C® (3A battery charge)

Features USB Type-C®, which enables quick and efficient battery charging.

HDMI Input (type D)

Equipped with HDMI input. For easy connection and enjoyment of HDMI compatible AV devices and game consoles.

Easy App Switching

The new user interface on the AV receiver simplifies smooth switching between WebLink and Apple CarPlay/Android Auto using connected devices.
The interface home display automatically shows available functions when a smartphone is connected to the receiver.

1

Push "Device" button.

2

Choose "Apple CarPlay" tag.

3

Push "Apple CarPlay" button.

4

Apple CarPlay screen shows up.

AV Receivers

A Series

AV RECEIVERS

KEY FEATURES STEP-UP COMPARISON CHART

A Series

1 / 2

		DMH-A5450BT	DMH-A4450BT	DMH-AF555BT	DMH-A345BT	DMH-A245BT	AVH-A245BT
				New			
Display & User Interface	Screen Size/Din Size	6.8" 2-DIN	6.8" 2-DIN	9" Floating	6.8" 2-DIN	6.2" 2-DIN	6.2" 2-DIN
	Capacitive & Flat Design	CAPACITIVE FLAT DESIGN	CAPACITIVE FLAT DESIGN	CAPACITIVE FLAT DESIGN	CAPACITIVE FLAT DESIGN		
Basic Functions	USB Port*1	Rear	Rear	Rear	Rear	Front	Front
	Preout	3 RCA pre-outs (2V)	3 RCA pre-outs (2V)	3 RCA pre-outs (2V)	3 RCA pre-outs (2V) *2	3 RCA pre-outs (2V) *2	3 RCA pre-outs (2V) *2
	Rear-View Camera Input*3	Back UP Camera Ready	Back UP Camera Ready	Back UP Camera Ready	Back UP Camera Ready	Back UP Camera Ready	Back UP Camera Ready
	USB Quick Charge for Smartphones	Android 1.5A USB QUICK CHARGE *4	Android 1.5A USB QUICK CHARGE *4	Android 1.5A USB QUICK CHARGE *4	Android 1.5A USB QUICK CHARGE *4	Android 1.5A USB QUICK CHARGE *4	Android 1.5A USB QUICK CHARGE
Audio/Video	CD-R/CD-RW/Video CD/DVD-R/DVD-RW/ DVD-Video playback						DVD-R/RW CD-R/RW
	Video Codec	WMV MP4 H.264	WMV MP4 H.264	WMV MP4 H.264	WMV MP4 H.264	WMV MP4 H.264	WMV MP4 H.264
	Equalizer	13 BAND VSX	13 BAND VSX	13 BAND VSX	13 BAND VSX	13 BAND VSX	13 BAND VSX
	Audio Codec	MP3 WMA AAC WAV FLAC	MP3 WMA AAC WAV FLAC	MP3 WMA AAC WAV FLAC	MP3 WMA AAC WAV FLAC	MP3 WMA AAC WAV FLAC	MP3 WMA AAC WAV FLAC

*1. Pioneer cannot guarantee compatibility with all USB mass storage devices and assumes no responsibility for any loss of data on media players, smart phones, or other devices while using receiver.
*2. 1 preout for subwoofer.
*3. Use input only for reverse or mirror image rear view camera. Other use may result in injury or damage.
*4. 1.5 A quick charging is also available for iPhone 6 or later models.

AV RECEIVERS

KEY FEATURES STEP-UP COMPARISON CHART

A Series

2 / 2

		DMH-A5450BT	DMH-A4450BT	DMH-AF555BT	DMH-A345BT	DMH-A245BT	AVH-A245BT
				New			
Smartphone Connectivity	Apple CarPlay Compatible*5	Works with Apple CarPlay Wireless and wired*6	Works with Apple CarPlay Wired *6				
	Android Auto Compatible*7	works with androidauto Wireless and wired *7*8*9	works with androidauto Wired *8*9				
	WebLink®	WebLink.		WebLink.	WebLink.	WebLink.	WebLink.
	Smartphone Mirroring	WebLink® Cast		WebLink® Cast	WebLink® Cast	WebLink® Cast	WebLink® Cast
	Built-in Bluetooth*10*11*12	HFP A2DP AVRCP SPP	HFP A2DP AVRCP SPP	HFP A2DP AVRCP SPP	HFP A2DP AVRCP	HFP A2DP AVRCP	HFP A2DP AVRCP
	Smartphone Pairing Memory	5 Devices	5 Devices	1 Device	1 Device	1 Device	1 Device

*5. Apple CarPlay requires Lightning to USB cable. For availability in your country, please visit http://www.apple.com/ios/carplay/
*6. CD-IU52 required (sold separately).
*7. Availability of Android Auto and Android Auto Wireless may vary depending upon your country and phone model. Please visit android.com/auto for more information.
*8. CD-MU200, CD-CU50 or CD-CCU500 required (sold separately).
*9. Not all Android phones are compatible.
*10. Optional cable required.
*11. Not all Android phones are compatible.
*12. HFP = Hands-Free Profile, A2DP = Advanced Audio Distribution Profile, AVRCP = Audio/Video Remote Control Profile, SPP = Serial Port Profile. Please refer to instruction manual for other information about profile compatibility.

Versatile Connectivity

	Apple CarPlay	Android Auto	Amazon Alexa	CarAVAssist	WebLink®	USB Mirroring	Wireless Mirroring
DMH-ZF9350BT	✓ (Wired & Wireless)	✓ (Wired & Wireless)	✓	✓			
DMH-ZS9350BT	✓ (Wired & Wireless)	✓ (Wired & Wireless)	✓	✓			
AVH-Z9250BT	✓ (Wired & Wireless)	✓ (Wired & Wireless)					✓ (Android phones)
DMH-Z6350BT	✓ (Wired & Wireless)	✓ (Wired & Wireless)	✓	✓			
DMH-ZF8550BT	✓ (Wired & Wireless)	✓ (Wired & Wireless)	✓ (No Browser)	✓			
DMH-Z5350BT	✓ (Wired)	✓ (Wired)			✓		
DMH-A5450BT	✓ (Wired & Wireless)	✓ (Wired & Wireless)			✓ (WebLink Cast®)	✓ (Android phones)	
DMH-A4450BT	✓ (Wired)	✓ (Wired)				✓ (Android phones)	
DMH-AF555BT					✓ (WebLink Cast®)		
DMH-A345BT					✓ (WebLink Cast®)		
DMH-A245BT					✓ (WebLink Cast®)		
AVH-A245BT					✓ (WebLink Cast®)		

Required Conditions

Apple CarPlay

Apple iPhone 5 or later with iOS 7.1.2 or higher, and requires Lightning to USB cable. Some phones may not compatible with this product. Please contact the local distributor for details. For more detail, please visit http://www.apple.com/ios/carplay

Android Auto

Android phone running Android 7.0 or higher, an active data For more detail, please visit https://www.android.com/auto/

WebLink®

iPhones with iOS version 13.0 and above
Android phones with Android ver.7.0 and above Only certified phones by WebLink as listed in the following site:
https://support.google.com/googleplay/answer/1727131?hl=en

USB Mirroring

Android phones with Android ver. 5.0 and above (up to OS10 as of May, 2021.)

DMH-A5450BT

6.8" 2-DIN

In-Dash Double-DIN Multimedia AV Receiver with 6.8" Capacitive WVGA, Touchscreen Display, Wired & Wireless Apple CarPlay, Wired & Wireless Android Auto, WebLink™ & WebLink® Cast , Mirroring for Android™, Built-in Bluetooth® and Full HD Video Playback from USB Device

Remote Control Included

Works with Apple CarPlay

works with androidauto

WebLink®

Bluetooth®

Made for iPhone | iPod

Compatible with Android

WebLink® Cast

Mirroring for Android™

Full HD 1920 x 1080

Android 1.5A USB QUICK CHARGE

13 BAND EQ

Bass Boost)))

3 RCA pre-outs

USB

Back UP Camera Ready

Key Selling Points

1. Versatile smartphone connectivity including Apple CarPlay, Android Auto, WebLink, and Smartphone mirroring
2. Smooth connection by Wireless CarPlay* and Android Auto Wireless*
3. High-performance AV features

*Service is not available in all areas

Apple CarPlay Wired & Wireless

Works with Apple CarPlay

Apple CarPlay is a smarter, safer way to use your iPhone while you drive. And now with an all new Apple CarPlay Dashboard that helps you with tunes, turns, and Siri suggestions, a Calendar app that lets you view and manage your day, and maps that reveal more of what's around you, getting there just got a whole lot easier. And a lot more fun. The popular applications like Waze are supported.

Apple CarPlay requires iPhone 5 or newer with the latest version of iOS. Apple is not responsible for the operation of this device or its compliance with safety and regulatory standards. Operations and functions may vary depending on iOS device or receivers.
Note: For availability in your country, please visit http://www.apple.com/ios/carplay

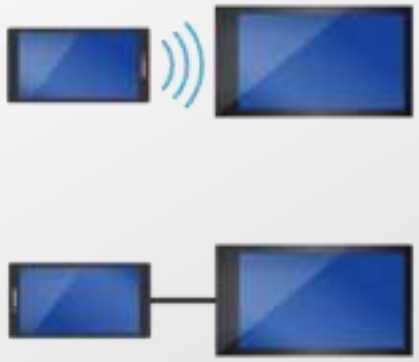

Android Auto™ Wired & Wireless

works with androidauto

Android Auto extends the Android™ platform into the car in a way that's purpose-built for driving. Android Auto automatically brings you useful information and organizes into simple cards that appear just when they're needed. It's designed to minimize distraction so you can stay focused on the road ahead. You can use the popular application like Waze.

Android Auto Wireless or Android Auto may not be available on all devices. Android Auto requires the Android Auto app on Google Play. To wirelessly use Android Auto on your car display, you need a compatible Android smartphone with an active data plan. You can check which smartphones are compatible at g.co/androidauto/requirements.

Standard text messaging rates apply. Visit support. google.com/android auto for more information.

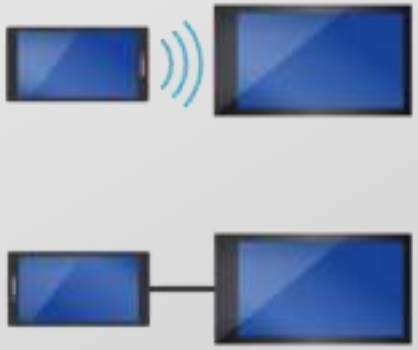

WebLink®

WebLink for Pioneer AV receivers expands in-car entertainment with an amazing world of apps. Enjoy personalized music, videos, and other connected content powered by your phone and the cloud.

Smartphone Minimum Requirements

In order for a smartphone to be compatible with WebLink, it must meet all of the following criteria:

iOS 14.0 and above
Android 7.0 and above

WebLink Host and WebLink compatible applications are supported on the following iOS and Android versions:

iOS – Version 14.0 and above is supported on WebLink
*iOS support includes the current major OS version and 1 previous major version. https://support.google.com/googleplay/answer/1727131?hl=en
- Phone must have a hardware video decoder
- Minimum CPU: 1.5GHz Dual Core
- Minimum RAM: 2GB

Notes: WebLink operability currently under review. Please contact the local distributor for details.

WebLink®

WebLink®

Music Player
Experience smarter and better in-car life by playing the music from your smartphone.

Search and information apps
You can use apps such as Yelp and Zomato directly from the AVH receiver, accessing important information inside your car more safely and conveniently.

Use the FAVORITES button to instantly switch to the content you use most often. With the SEARCH button, you can easily search for content.

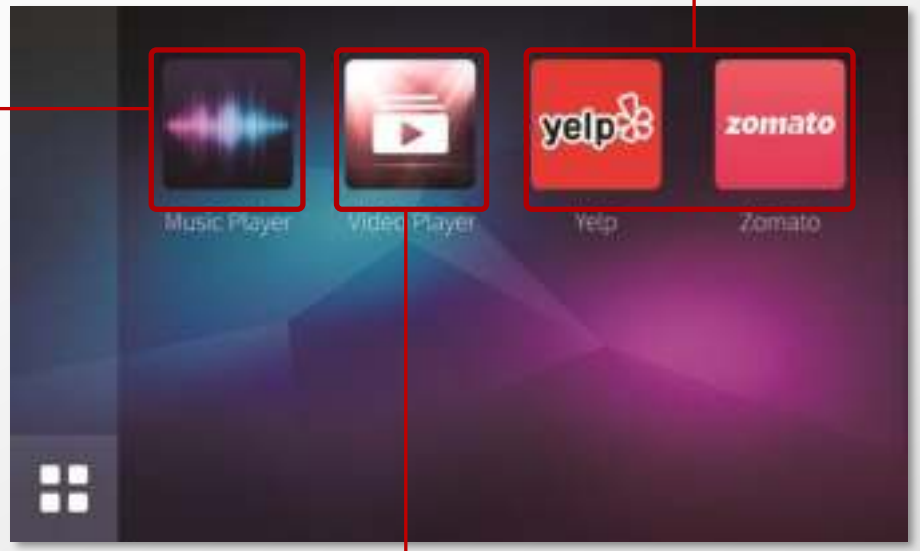

Video playback
WebLink advances your capability to play back video. Watch video stored in a smartphone or streamed through the cloud on the AV receiver's large display.

Simplified design featuring two large control icons ensures easy operation.

WebLink® is a registered trademark of Abalta Technologies, Inc.
Zomato is a trademark of Zomato Ltd.
Genius Maps is a trademark of Mireo d.d.

3.WebLink® Cast

WebLink®

The latest version of WebLink (WebLink 2.0) enables smartphone mirroring with touch control on iOS and Android via WebLink Cast app.

■ Procedures

1. Install WebLink Host app to a compatible smartphone (iPhone/Android).

2. Connect the smartphone to a compatible receiver with USB cable.

3. Touch WebLink Host app icon on the receiver screen.

4. Touch WebLink Cast app icon (WebLink 2.0 hardware only).

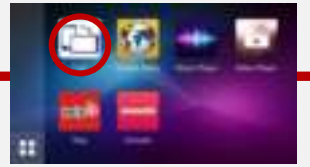

Mirroring various apps on iOS and Android with touch control

WebLink® Cast is a trademark of Abalta Technologies, Inc.

USB Mirroring

USB Mirroring lets you enjoy compatible smartphones apps in the car. You can operate USB Mirroring compatible applications with finger gestures such as tapping, dragging, scrolling, or flicking on the screen of the receiver.

- Available only for Android phones
- Compatible OS: Android ver. 5 and above (up to OS10 as of May, 2021)
- Launcher app "Autolink" required

Mirroring for Android™

■ Procedures

1. Install the Launcher app (Autolink) to a compatible Android phone.

2. Enter the setup menu of the compatible receiver and touch "Mirroring" in the "Priority of Connectivity" setting.

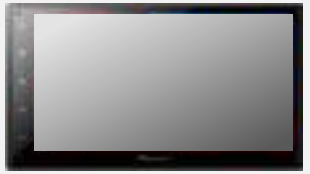

3. When connecting a smartphone, settings are automatically configured according to the device to be connected. Unlock the smartphone and touch "Mirroring" on the receiver's screen.

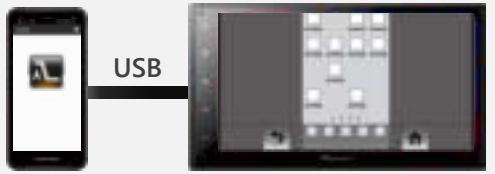

Built-in Bluetooth®

File Browsing can be used through AVRCP 1.6 version of Bluetooth.
You can easily search songs in the browsing display.

AVRCP Version 1.6

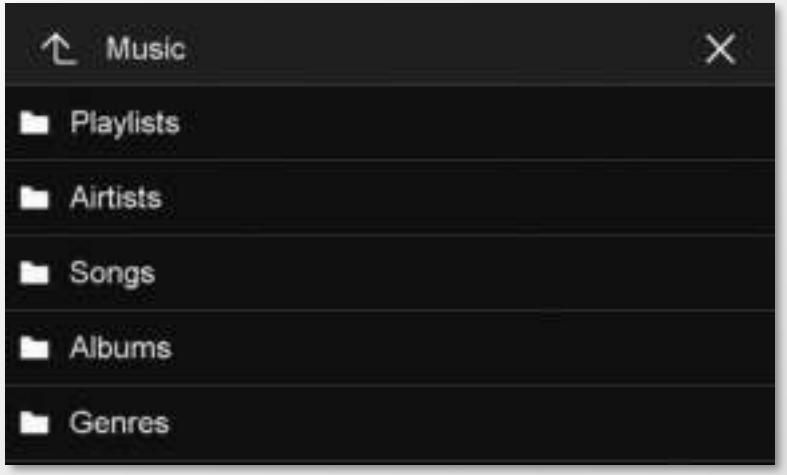

USB Quick Charge for Android (CDP)

Pioneer's AV receiver has a charging downstream port (CDP) providing up to 1.5 amperes to give an Android smartphone a quick charge.

Android 1.5A USB QUICK CHARGE

Full HD Video from USB Devices

New AV receivers can play Full HD (1080p) video from files encoded in various digital formats that are stored in your easy-to-connect USB devices.

Compatible Codec* with USB Device

Codec	Extension	
VC-1	.wmv/.asf	1920 x 1080/45 Mbps
H.264	.mp4/.mkv/.mov/.flv/.avi/.m4v	1920 x 1080/40 Mbps
H.263	.mp4/.mov/.avi/.m4v	1920 x 1080/20 Mbps
MPEG-4	.mp4/.mkv/.mov/.avi/.divx/.m4v	1920 x 1080/40 Mbps
MPEG-2**	.mpeg/.mpg/.ts	720 x 576/40 Mbps

* Playback capability for various content may change.
** Not compatible with Full HD playback.

Parking Assist Guidelines

When you shift the vehicle into reverse, parking assist guidelines appear in the display for convenient parking guidance.

Different from the actual illustrations

Rear view camera

Sleek Cosmetic Design

Capacitive touch panel realizes sleek design. The appearance is beautiful because of full flat shaped unit.. You will feel comfortable when you touch highly reacted screen. Capacitive touch panel has also merit of sun light blocking effect.

Sound Tuning

Detailed tuning features realize comfortable quality for your time in the car.

13-Band Graphic EQ

Crossover Setting

Speaker Level Setting

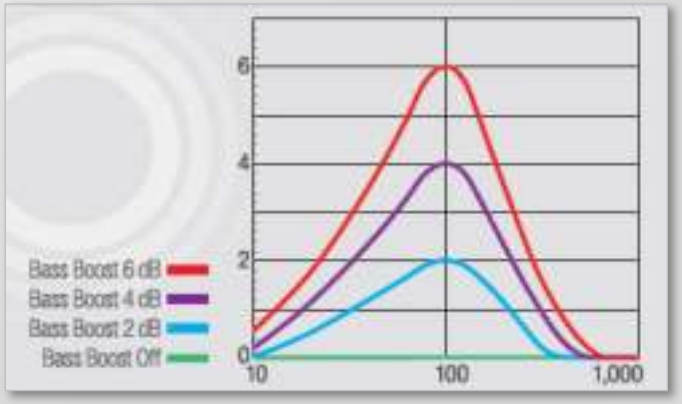

Bass Boost

DMH-A4450BT

Remote Control Included

In-Dash Double-DIN Multimedia AV Receiver with 6.8" Capacitive WVGA, Touchscreen Display, Apple CarPlay, Android Auto, Mirroring for Android™, Built-in Bluetooth® and Full HD Video Playback from USB Device

Works with Apple CarPlay

works with androidauto

Mirroring for Android™

Bluetooth

Full HD 1920 x 1080

Android 1.5A USB QUICK CHARGE

13 BAND EQ

Bass Boost)))

USB

3 RCA pre-outs

Back UP Camera Ready

Rear Panel

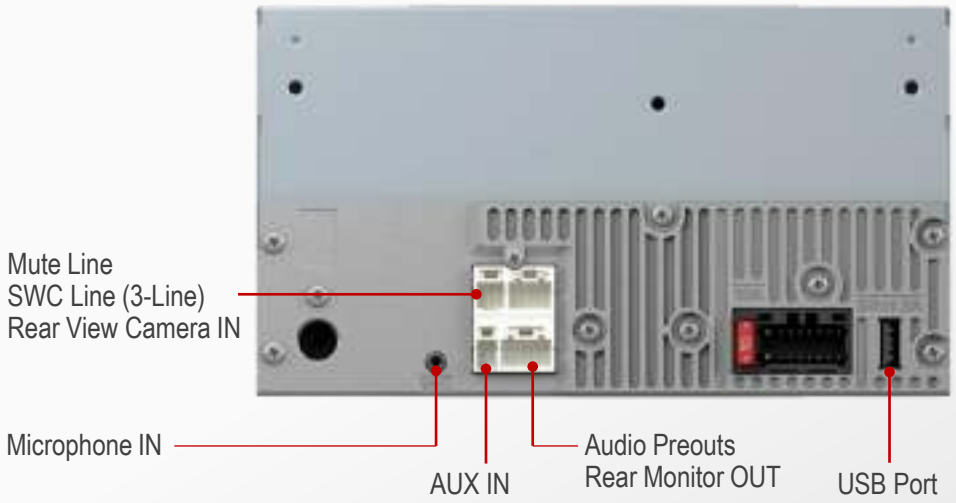

Dimensions

Unit: mm

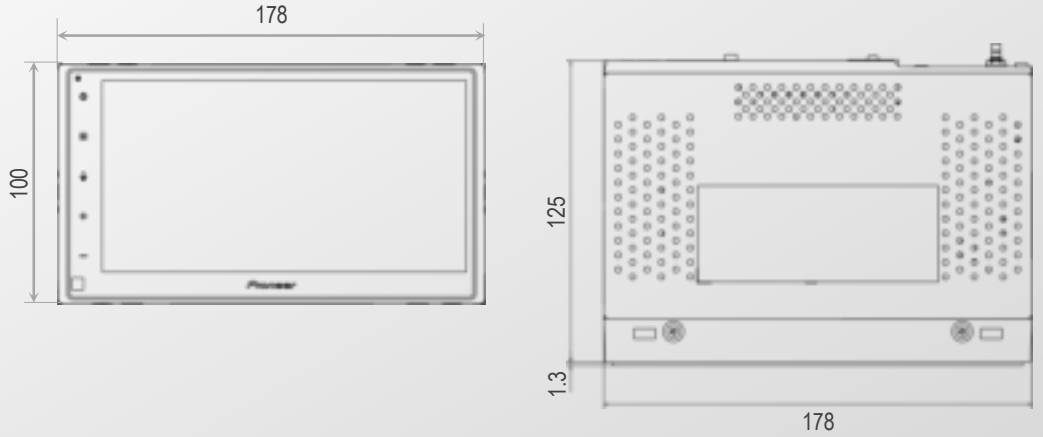

Key Selling Points

DMH-A4450BT

1. Versatile smartphone connectivity including Apple CarPlay, Android Auto, and USB mirroring*

*Android only

2. Sleek cosmetic with 6.8" full-flat capacitive touch screen

3. High-performance AV features

USB Mirroring

USB Mirroring lets you enjoy compatible smartphones apps in the car. You can operate USB Mirroring compatible applications with finger gestures such as tapping, dragging, scrolling, or flicking on the screen of the receiver.

- Available only for Android phones
- Compatible OS: Android ver. 5 and above (up to OS10 as of May, 2021)
- Launcher app "Autolink" required

Mirroring for Android™

■ Procedures

1. Install the Launcher app (Autolink) to a compatible Android phone.

2. Enter the setup menu of the compatible receiver and touch "Mirroring" in the "Priority of Connectivity" setting.

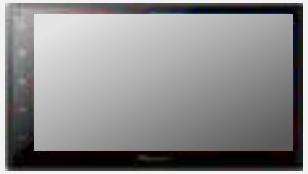

3. When connecting a smartphone, settings are automatically configured according to the device to be connected. Unlock the smartphone and touch "Mirroring" on the receiver's screen.

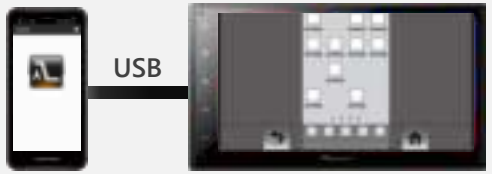

Apple CarPlay*

Apple CarPlay is a smarter, safer way to use your iPhone while you drive. And now with an all new Apple CarPlay Dashboard that helps you with tunes, turns, and Siri suggestions, a Calendar app that lets you view and manage your day, and maps that reveal more of what's around you, getting there just got a whole lot easier. And a lot more fun. The popular applications like Waze are supported.

* Apple CarPlay is available on Apple iPhone 5 or later with iOS 7.1.2 or higher, and requires Lightning to USB cable. Some phones may not compatible with this product. Please contact the local distributor for details.
Note: For availability in your country, please visit http://www.apple.com/ios/carplay

Android Auto™*

Android Auto extends the Android™ platform into the car in a way that's purpose-built for driving. Android Auto automatically brings you useful information and organizes into simple cards that appear just when they're needed. It's designed to minimize distraction so you can stay focused on the road ahead. You can use the popular application like Waze.

Android Auto Wireless or Android Auto may not be available on all devices. Android Auto requires the Android Auto app on Google Play. To wirelessly use Android Auto on your car display, you need a compatible Android smartphone with an active data plan. You can check which smartphones are compatible at g.co/androidauto/requirements.

Standard text messaging rates apply. Visit support. google.com/android auto for more information.

Built-in Bluetooth®

File Browsing can be used through AVRCP 1.6 version of Bluetooth.
You can easily search songs in the browsing display.

AVRCP Version 1.6

Bluetooth®

USB Quick Charge for Android (CDP)

Pioneer's AV receiver has a charging downstream port (CDP) providing up to 1.5 amperes to give an Android smartphone a quick charge.

Android 1.5A USB QUICK CHARGE

Direct Control for Certain Android Phones (MTP Mode)

Take advantage of a wired USB connection to the receiver. Sound stays clean and clear, file search and access are very quick, and song, artist, time and album displays are user-friendly.

USB

Compatible with Android

Full HD Video from USB Devices

New AV receivers can play Full HD (1080p) video from files encoded in various digital formats that are stored in your easy-to-connect USB devices.

Compatible Codec* with USB Device

Codec	Extension	
VC-1	.wmv/.asf	1920 x 1080/45 Mbps
H.264	.mp4/.mkv/.mov/.flv/.avi/.m4v	1920 x 1080/40 Mbps
H.263	.mp4/.mov/.avi/.m4v	1920 x 1080/20 Mbps
MPEG-4	.mp4/.mkv/.mov/.avi/.divx/.m4v	1920 x 1080/40 Mbps
MPEG-2**	.mpeg/.mpg/.ts	720 x 576/40 Mbps
DivX®**	.avi/.divx	720 x 576/40 Mbps

* Playback capability for various content may change.
** Not compatible with Full HD playback.

Parking Assist Guidelines

When you shift the vehicle into reverse, parking assist guidelines appear in the display for convenient parking guidance.

Different from the actual illustrations

Rear view camera

Sleek Cosmetic Design

Capacitive touch panel realizes sleek design. The appearance is beautiful because of full flat shaped unit.. You will feel comfortable when you touch highly reacted screen. Capacitive touch panel has also merit of sun light blocking effect.

Sound Tuning

Detailed tuning features realize comfortable quality for your time in the car.

13-Band Graphic EQ

Crossover Setting

Speaker Level Setting

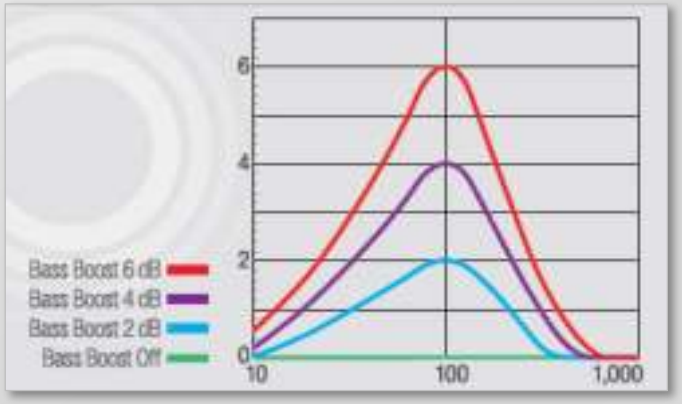

Bass Boost

DMH-AF555BT

9" Floating

Floating Type Multimedia AV Receiver

9.0" Capacitive WSVGA, Touchscreen Display, WebLink®, WebLink® Cast, Built-in Bluetooth® and Full HD Video Playback from USB Device

WebLink® WebLink® Cast

Full HD 1920×1080

Bluetooth®

Android 1.5A USB QUICK CHARGE

USB

13 BAND EQ

Back UP Camera Ready

3 RCA pre-outs

Key Selling Points

1. Sleek cosmetic with 9.0" full-flat capacitive touch screen
2. Smartphone mirroring via WebLink® Cast (iPhone/Android™)
3. High-performance AV features

*After market category as of ''22 Nov'' Pioneer's research

Sleek cosmetic with 9.0" full-flat capacitive touch screen

Dynamic & Beauty with 9-inch screen

Large 9-inch screen provides an expansive viewing experience that makes map reading easier. Furthermore, the large screen enables powerful and impressive image.

WSVGA Resolution

Increasing the WVGA screen size from 6.8” to 9” will down the dpi.
The image will be rough. But if it is WSVGA, it can be displayed neatly even if it is displayed large.

WVGA 6.8” and WSVGA 9” have almost the same dpi (resolution level).

Sleek cosmetic with 9.0" full-flat capacitive touch screen

Floating Installation

The floating display configuration allows a large display to be installed using a universal 2-DIN chassis.

Adjustable Screen (manual)

WARNING: Keep hands and fingers clear of this product when adjusting the display angle. Be especially cautious of children's hands and fingers.

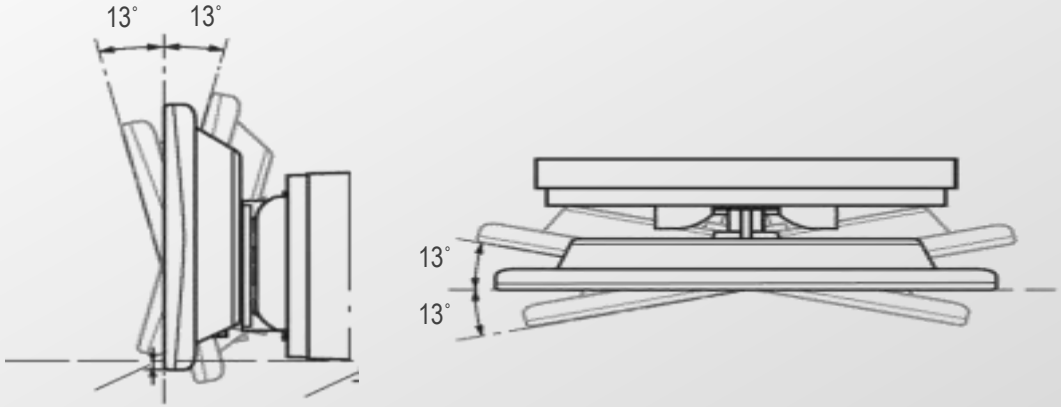

Display angle

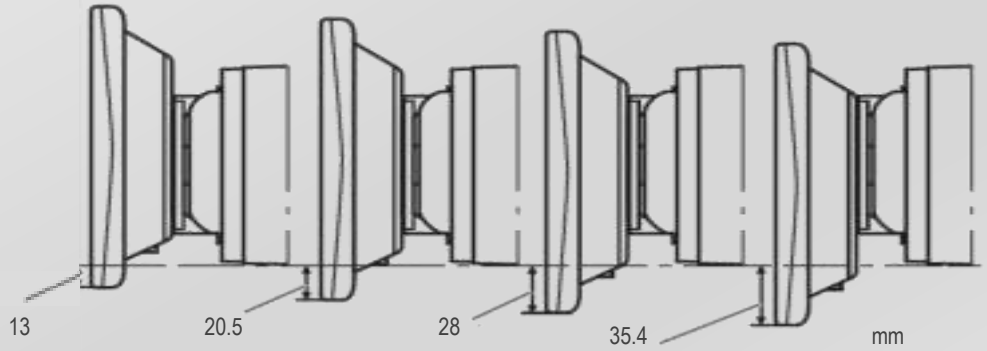

Vertical position

Dimensions

Unit: mm

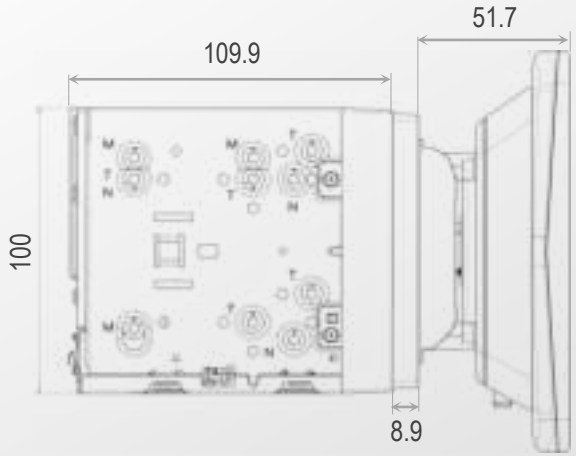

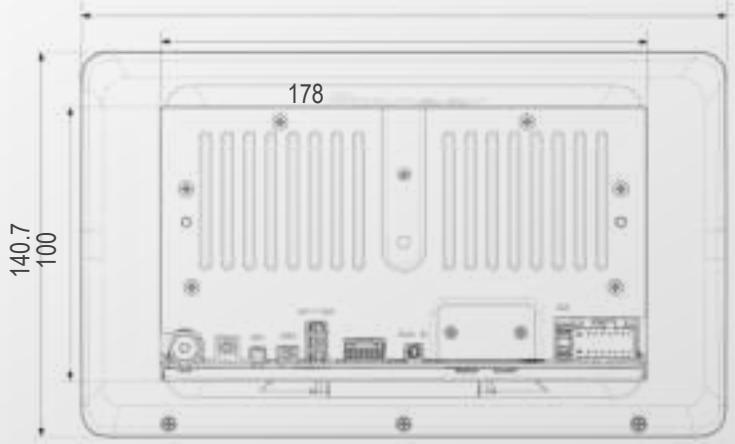

Amount of protrusion from the 2DIN aperture

Note:
Appearance varies depending on the car.
Please check if the large display does not hide the wind outlet of air conditioner.

Smartphone mirroring via WebLink® Cast (iPhone/Android™)

WebLink® Cast

WebLink ver.2.0 & above enable for smartphone mirroring with touch control on iOS and Android via WebLink Cast app.

■ Procedures

1. Install WebLink Host app to a compatible smartphone (iPhone/Android).

2. Connect the smartphone to a compatible receiver with USB cable.

3. Touch WebLink Host app icon on the receiver screen.

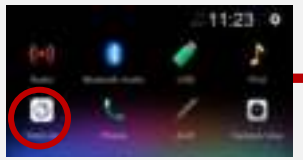

4. Touch WebLink Cast app icon (WebLink 2.0 hardware only).

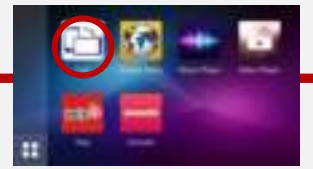

Mirroring various apps on iOS and Android with touch control

WebLink® Cast is a trademark of Abalta Technologies, Inc.

WebLink®

WebLink for Pioneer AV receivers expands in-car entertainment with an amazing world of apps. Enjoy personalized music, videos, and other connected content powered by your phone and the cloud.

Smartphone Minimum Requirements

In order for a smartphone to be compatible with WebLink, it must meet all of the following criteria:

•iOS – Version 14.0 and above is supported on WebLink
*iOS support includes the current major OS version and 1 previous major version.
• Android – Version 7.0 and above on Google certified phones is supported on WebLink.
: https://support.google.com/googleplay/answer/1727131?hl=en
• Phone must have a hardware video decoder
• Minimum CPU: 1.5GHz Dual Core
• Minimum RAM: 2GB

WebLink®

WebLink®

Music Player
Experience smarter and better in-car life by playing the music from your smartphone.

Search and information apps
You can use apps such as Yelp and Zomato directly from the AVH receiver, accessing important information inside your car more safely and conveniently.

Use the FAVORITES button to instantly switch to the content you use most often. With the SEARCH button, you can easily search for content.

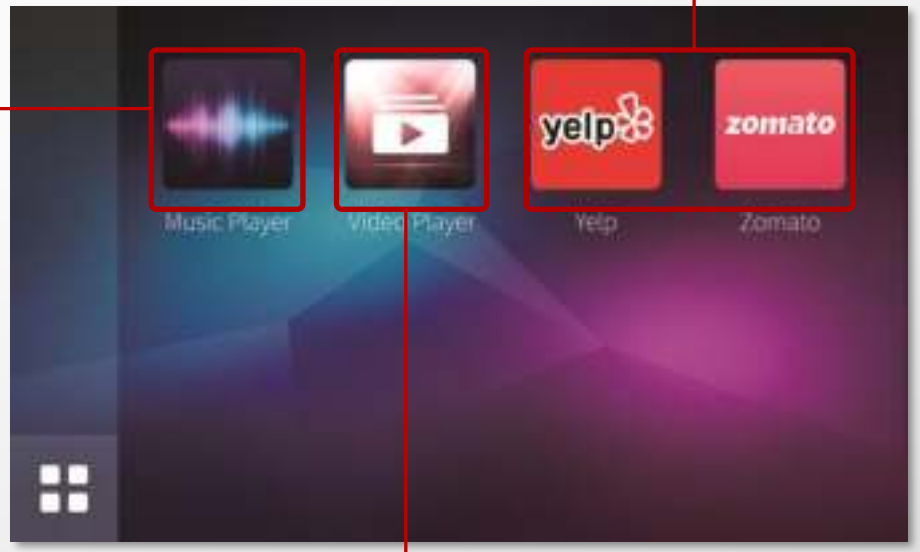

Video playback
WebLink advances your capability to play back video. Watch video stored in a smartphone or streamed through the cloud on the AV receiver's large display.

Simplified design featuring two large control icons ensures easy operation.

WebLink® is a registered trademark of Abalta Technologies, Inc.
Zomato is a trademark of Zomato Pvt Ltd.
Genius Maps is a trademark of Mireo d.d.

High-performance AV features

Sound Tuning

Detailed tuning features realize comfortable quality for your time in the car.

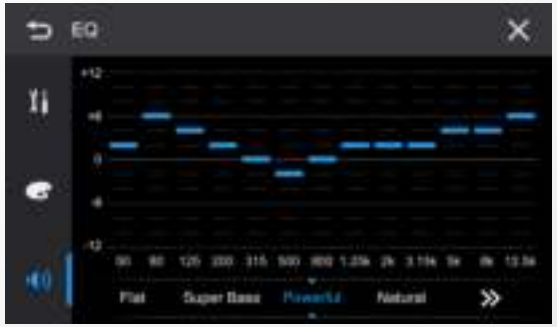

13-Band Graphic EQ

Crossover Setting

You can enjoy the dynamic sound by Bass Boost function.

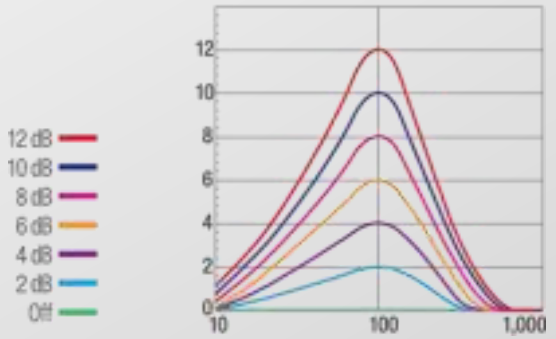

Bass Boost

Full HD Video from USB Devices

New AV receivers can play Full HD (1080p) video from files encoded in various digital formats that are stored in your easy-to-connect USB devices.

Compatible Codec* with USB Device

Codec	Extension	Maximum resolution	Maxium frame rate
VC-1	.wmv/.mkv	1920×1080	30fps
H.264	.mp4/.mkv/.mov/.flv/.avi/.m4v/.ts/.m2ts/.mts	1920×1080	30fps
H.263	.flv	1920×1080	30fps
MPEG-4	.mp4/.mkv/.mov/.avi/	1920×1080	30fps
MPEG-2	.mpeg**/.mpg**/.ts/.m2ts	1920×1080	30fps

* Playback capability for various content may change.
** Not compatible with Full HD playback.

Built-in Bluetooth®

File Browsing can be used through AVRCP 1.6 version of Bluetooth.
You can easily search songs in the browsing display.

AVRCP Version 1.6

Bluetooth®

USB Quick Charge for Android (CDP)

Pioneer's AV receiver has a charging downstream port (CDP) providing up to 1.5 amperes to give an Android smartphone a quick charge.

Android 1.5A USB QUICK CHARGE

Parking Assist Guidelines

When you shift the vehicle into reverse, parking assist guidelines appear in the display for convenient parking guidance.

Different from the actual illustrations

Rear view camera

DMH-A345BT

Remote Control Included

In-Dash Double-DIN Multimedia AV Receiver with 6.8" Capacitive WVGA, Touchscreen Display, WebLink®, WebLink® Cast , Built-in Bluetooth® and Full HD Video Playback from USB Device

WebLink® Cast

Made for iPhone

Compatible with Android

Bluetooth

Full HD 1920 x 1080

Android 1.5A USB QUICK CHARGE

13 BAND EQ

Bass Boost)))

USB

3 RCA pre-outs

Back UP Camera Ready

Rear Panel

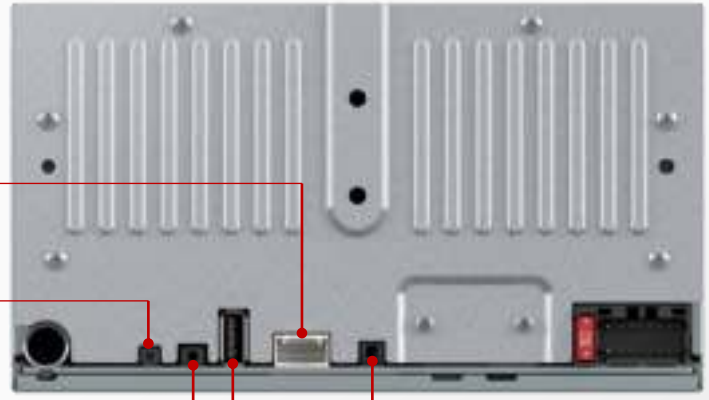

Dimensions

Unit: mm

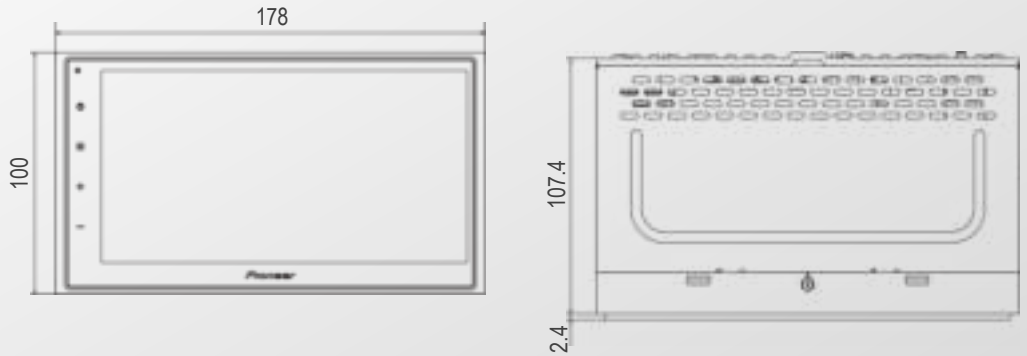

Key Selling Points

DMH-A345BT

1. Smartphone mirroring via WebLink® Cast (iPhone/Android™)
2. Sleek cosmetic with 6.8" full-flat capacitive touch screen
3. High-performance AV features

DMH-A245BT

In-Dash Double-DIN Multimedia AV Receiver with 6.2" WVGA Touchscreen Display, WebLink®, WebLink® Cast , Built-in Bluetooth® and Full HD Video Playback from USB Device

Remote Control Included

WebLink® WebLink® Cast

Made for iPhone · Compatible with Android · Bluetooth

Full HD 1920 x 1080 · Android 1.5A USB QUICK CHARGE · 13 BAND EQ · Bass Boost)))

USB · 3 RCA pre-outs · Back UP Camera Ready

Rear Panel

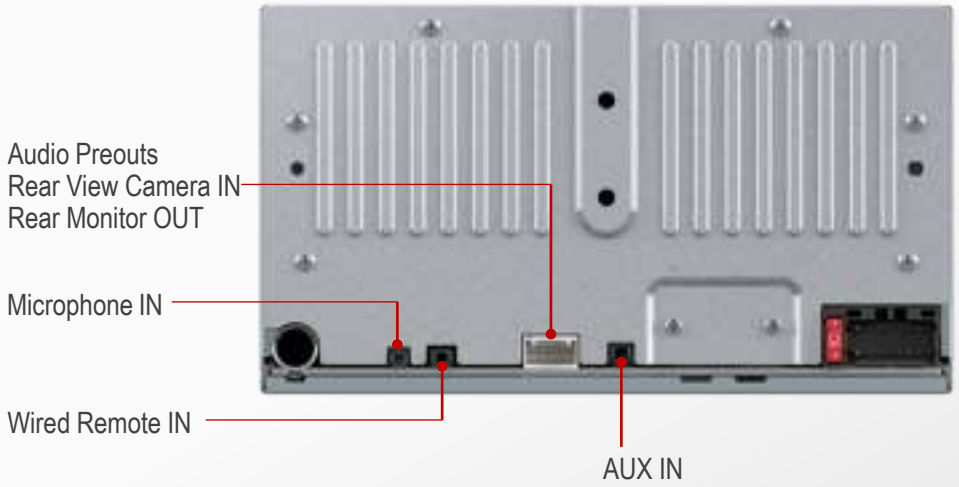

Dimensions

Unit: mm

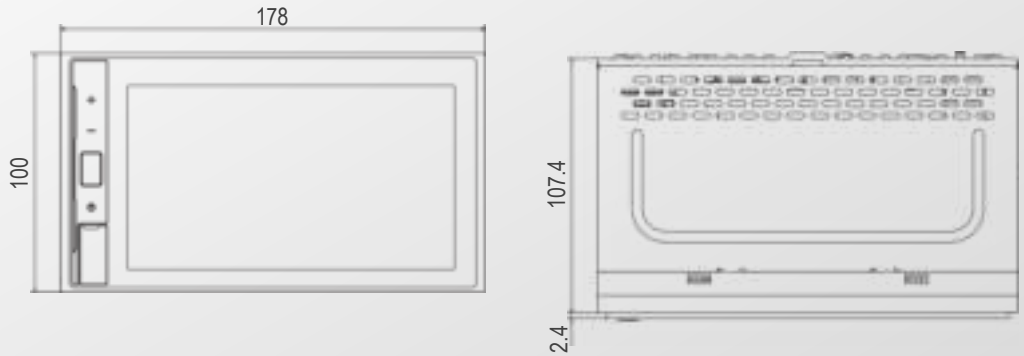

Key Selling Points

DMH-A245BT

1. Smartphone mirroring via WebLink® Cast (iPhone/Android™)
2. High-performance AV features
3. Smart design for your comfortable driving

AVH-A245BT

Remote Control Included

In-Dash Double-DIN DVD Multimedia AV Receiver with 6.2" WVGA Touchscreen Display, WebLink®, WebLink® Cast , Built-in Bluetooth® and Full HD Video Playback from USB Device

WebLink® WebLink® Cast

Made for iPhone · Compatible with Android · Bluetooth®

1.5A USB QUICK CHARGE · 13 BAND EQ · Bass Boost)))

DVD VIDEO · USB · 3 RCA pre-outs · Back UP Camera

Rear Panel

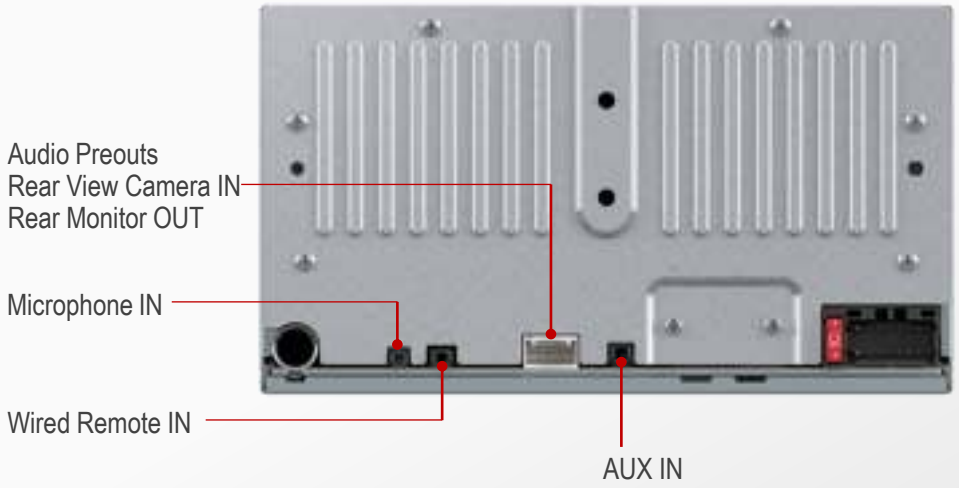

Dimensions

Unit: mm

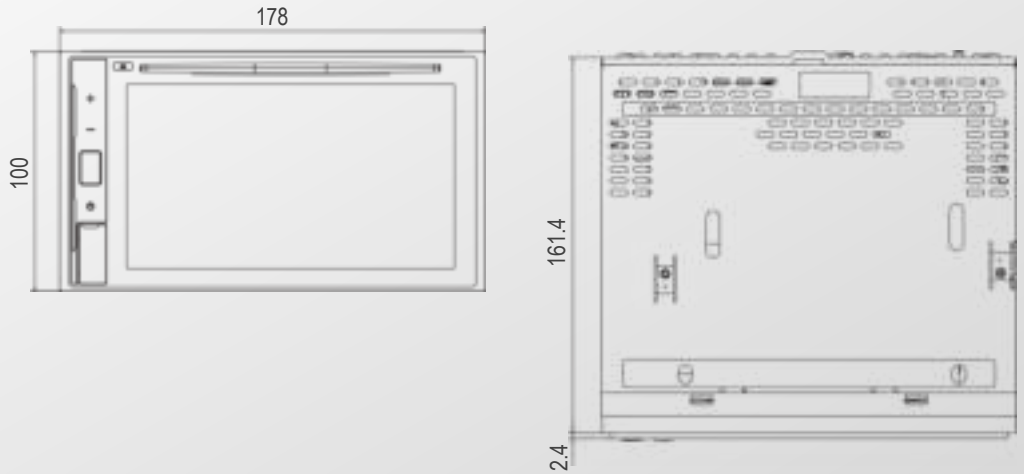

Key Selling Points

AVH-A245BT

1. Smartphone mirroring via WebLink ® Cast (iPhone/Android™)
2. High-performance AV features
3. Smart design for your comfortable driving

WebLink®

WebLink for Pioneer AV receivers expands in-car entertainment with an amazing world of apps. Enjoy personalized music, videos, and other connected content powered by your phone and the cloud.

Smartphone Minimum Requirements

In order for a smartphone to be compatible with WebLink, it must meet all of the following criteria:

iOS 14.0 and above
Android 7.0 and above

WebLink Host and WebLink compatible applications are supported on the following iOS and Android versions:

iOS – Version 14.0 and above is supported on WebLink
*iOS support includes the current major OS version and 1 previous major version. https://support.google.com/googleplay/answer/1727131?hl=en
- Phone must have a hardware video decoder
- Minimum CPU: 1.5GHz Dual Core
- Minimum RAM: 2GB

Notes: WebLink operability currently under review. Please contact the local distributor for details.

WebLink®

WebLink®

Music Player
Experience smarter and better in-car life by playing the music from your smartphone.

Search and information apps
You can use apps such as Yelp and Zomato directly from the AVH receiver, accessing important information inside your car more safely and conveniently.

Use the FAVORITES button to instantly switch to the content you use most often. With the SEARCH button, you can easily search for content.

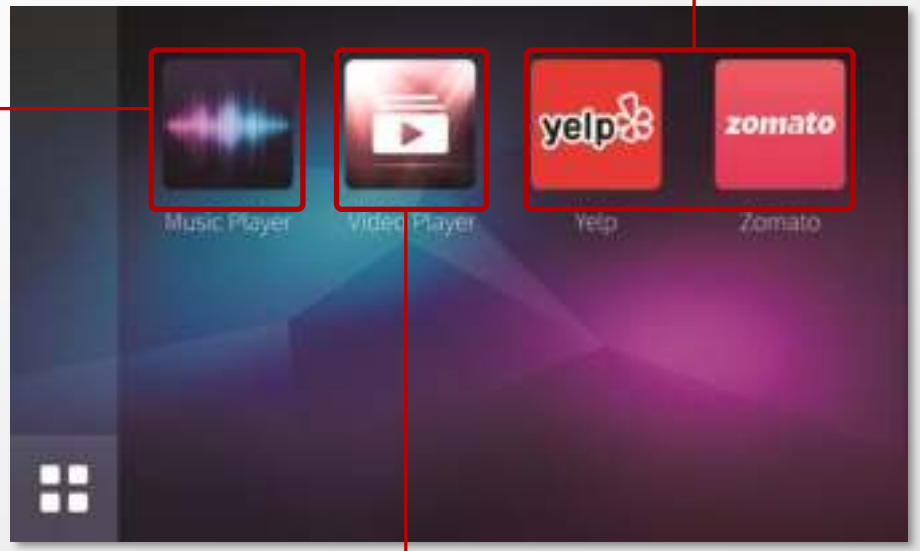

Video playback
WebLink advances your capability to play back video. Watch video stored in a smartphone or streamed through the cloud on the AV receiver's large display.

Simplified design featuring two large control icons ensures easy operation.

WebLink® is a registered trademark of Abalta Technologies, Inc.
Zomato is a trademark of Zomato Ltd.
Genius Maps is a trademark of Mireo d.d.

3.WebLink® Cast

WebLink®

The latest version of WebLink (WebLink 2.0) enables smartphone mirroring with touch control on iOS and Android via WebLink Cast app.

■ Procedures

1. Install WebLink Host app to a compatible smartphone (iPhone/Android).

2. Connect the smartphone to a compatible receiver with USB cable.

3. Touch WebLink Host app icon on the receiver screen.

4. Touch WebLink Cast app icon (WebLink 2.0 hardware only).

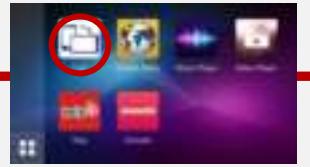

Mirroring various apps on iOS and Android with touch control

WebLink® Cast is a trademark of Abalta Technologies, Inc.

Built-in Bluetooth®

File Browsing can be used through AVRCP 1.6 version of Bluetooth.
You can easily search songs in the browsing display.

AVRCP Version 1.6

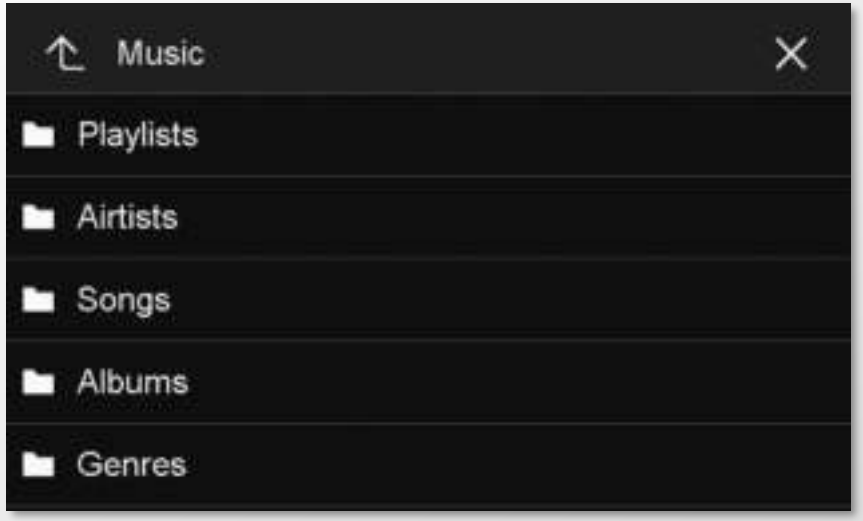

USB Quick Charge for Android (CDP)

Pioneer's AV receiver has a charging downstream port (CDP) providing up to 1.5 amperes to give an Android smartphone a quick charge.

Android 1.5A USB QUICK CHARGE

Full HD Video from USB Devices

New AV receivers can play Full HD (1080p) video from files encoded in various digital formats that are stored in your easy-to-connect USB devices.

Compatible Codec* with USB Device

Codec	Extension	
VC-1	.wmv/.asf	1920 x 1080/45 Mbps
H.264	.mp4/.mkv/.mov/.flv/.avi/.m4v	1920 x 1080/40 Mbps
H.263	.mp4/.mov/.avi/.m4v	1920 x 1080/20 Mbps
MPEG-4	.mp4/.mkv/.mov/.avi/.divx/.m4v	1920 x 1080/40 Mbps
MPEG-2**	.mpeg/.mpg/.ts	720 x 576/40 Mbps
DivX***	.avi/.divx	720 x 576/40 Mbps

* Playback capability for various content may change.
** Not compatible with Full HD playback.

Sound Tuning

Detailed tuning features realize comfortable quality for your time in the car.

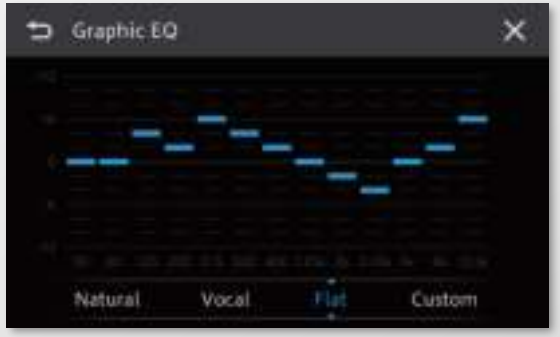

13-Band Graphic EQ

Crossover Setting

You can enjoy the dynamic sound by Bass Boost function.

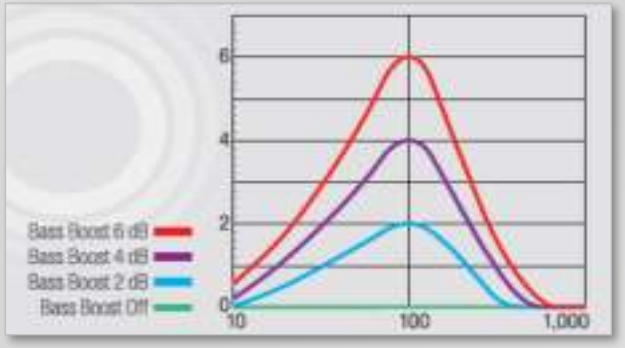

Bass Boost

Parking Assistance

Back-up Camera Input-Ability to add a rear-facing camera for assistance with rear visibility.

Camera is optional.

AV Receivers

G Series

AV RECEIVERS

KEY FEATURES STEP-UP COMPARISON CHART

	G Series	AVH-G225BT	DMH-G225BT	
Basic Functions	Screen Size/Din Size	6.2" 2-DIN	6.2" 2-DIN	
	USB Port*1	Front	Front	
	Preout	2 RCA pre-outs (2V)	2 RCA pre-outs (2V)	
Smartphone Integration	Direct Control for Certain Android™ Phones*2*3	USB	USB	
	Built-in Bluetooth*4	HFP A2DP AVRCP	HFP A2DP AVRCP	
Audio/Video	CD-R/CD-RW/Video CD/DVD-R/DVD-RW/ DVD-Video playback	DVD-R/RW CD-R/RW		
	Video Codec	DivX MP4	DivX MP4	
	Equalizer	7 BAND EQ	7 BAND EQ	
	Audio Codec	MP3 WMA AAC WAV	MP3 WMA AAC WAV	
Others	Rear-View Camera Input*5	Back UP Camera Ready	Back UP Camera Ready	

*1. Pioneer cannot guarantee compatibility with all USB mass storage devices and assumes no responsibility for any loss of data on media players, smart phones, or other devices while using receiver.
*2. Optional cable required.
*3. Not all Android phones are compatible.
*4. HFP = Hands-Free Profile, A2DP = Advanced Audio Distribution Profile, AVRCP = Audio/Video Remote Control Profile, Please refer to instruction manual for other information about profile compatibility.
*5. Use input only for reverse or mirror image rear view camera. Other use may result in injury or damage.

AVH-G225BT

6.2" 2-DIN

Remote Control Included

In-Dash Double-DIN DVD Multimedia AV Receiver with 6.2" WVGA Touchscreen Display, Built-in Bluetooth®, and Direct Control for Certain Android Phones

Bluetooth® USB Compatible with Android

7 Band EQ | 2 RCA pre-outs | MULTI-LANGUAGE DISPLAY

DVD VIDEO | DOLBY DIGITAL | Back UP Camera Ready

Rear Panel

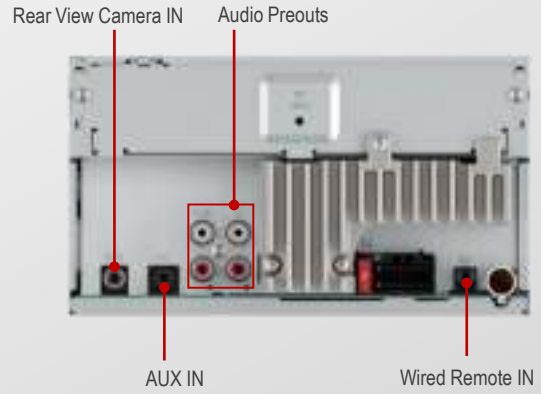

DMH-G225BT

6.2" 2-DIN

Remote Control Included

In-Dash Double-DIN Digital Media AV Receiver with 6.2" WVGA Touchscreen Display, Built-in Bluetooth®, and Direct Control for Certain Android Phones

Bluetooth® USB Compatible with Android

7 Band EQ | 2 RCA pre-outs | MULTI-LANGUAGE DISPLAY | Back UP Camera Ready

Rear Panel

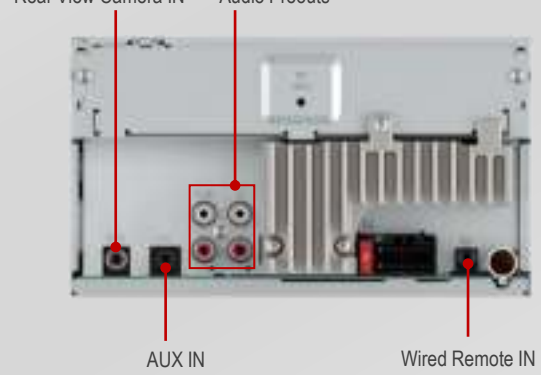

Built-in Bluetooth®

Bluetooth

File Browsing can be used through AVRCP 1.5 version of Bluetooth. You can easily search songs in the browsing display.

AVRCP Version 1.5

Built-in Front USB Port and Bluetooth Mic

AVH-G225BT/DMH-G225BT's front panel features a built-in Bluetooth mic and USB port for easy access.

Direct Control for Certain Android Phones (MTP Mode)

Take advantage of a wired USB connection to the receiver. Sound stays clean and clear, file search and access are very quick, and song, artist, time and album displays are user-friendly.

USB

Compatible with Android

Easy Source Switching

To switch the source display, just touch a button on the screen.

7-Band Graphic EQ

» See next page for details

Easy Device Switching

Display shows devices that the receiver is paired with, so it's convenient for users to share use of the receiver with other car passengers.

Pair up to three smartphones with receiver

If each of up three smartphones in the car is paired with the receiver via Bluetooth, switching among the smartphones is as simple as touching the appropriate button on the receiver display.

Selectable Wall Paper*

More wall paper selections let you arrange an AV receiver's display as you like.

* User's photo image data cannot be registered.

7-Band Graphic EQ

7-band EQ adjustment allows you to fine-tune sound quality just as you like it.

5-Display Colors

Select among five (Blue/Red/Amber/Green/White) colors for the display.

Pioneer Smart Sync

Pioneer Smart Sync

- What is Pioneer Smart Sync?
- Lineup
- Key Features (New & Existing)
- Recent Updates (as of Fall 2022)
- Importance of Radio's Firmware Update

Note:
Smartphone not included with SPH-C10BT. Pioneer Smart Sync App download required.
The user interface and screen content may change due to application updates.

What is Pioneer Smart Sync ?

A highly evolved app links your smartphone to compatible Pioneer car receiver

- Alexa is not available in all languages and countries.
- Alexa features and functionality may vary by location.

Key Selling Points

1. *Enhanced usability of compatible audio receivers*
2. *Higher quality sound experience*
3. *Customizable setting for your driving time*

CD Receiver

DEH-S4250BT

DEH-S5250BT

FH-S525BT

FH-S725BT

Digital Media Receiver

MVH-S325BT

MVH-S425BT

MVH-MS310BT (marine)

Smartphone Receiver

SPH-C10BT

*Smartphone not included

Pioneer Smart Sync app

Download on the App Store

GET IT ON Google Play

Download Pioneer Smart Sync app

Download on the App Store

GET IT ON Google Play

Your smartphone

iPhone : iOS12 and above

Android phone : OS5.0 and above

Bluetooth®

Control & Sound

USB

Battery charge

Pioneer receiver

Compatible with
Pioneer Smart Sync

Enhanced usability of compatible audio receivers

Larger display & Smart UI upgrades your driving experience.

Selectable UI mode

Customizable background

Song list

Amazon Alexa
*available areas only

Greater interface is on your hand instantly

Quick access via the receiver's key to compatible apps

Audio receiver Key layout may differ by models

Access Navi apps

Activate

Reading Messages out

Smartphone receiver

Source Change

Pioneer Smart Sync App Launch

Voice Recognition

Navi Apps

Message Read-Out

Phonebook
Call & Receive

Higher quality sound experience

Detailed set-up with your Smartphone screen

31 Band EQ

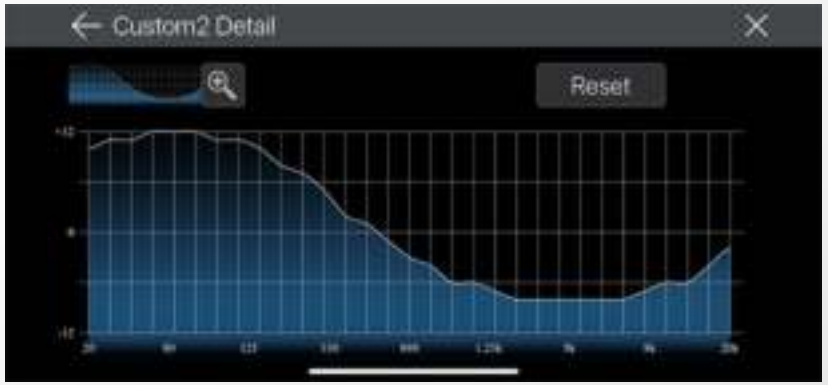

Makes possible precise adjustment of equalizer settings. Handy preset EQ settings are provided, too.

Easy Sound Fit (Time Alignment)

For aligned sound performance from each speaker, simply select the vehicle type—all it takes is a single touch.

Super *"Todoroki"* Sound

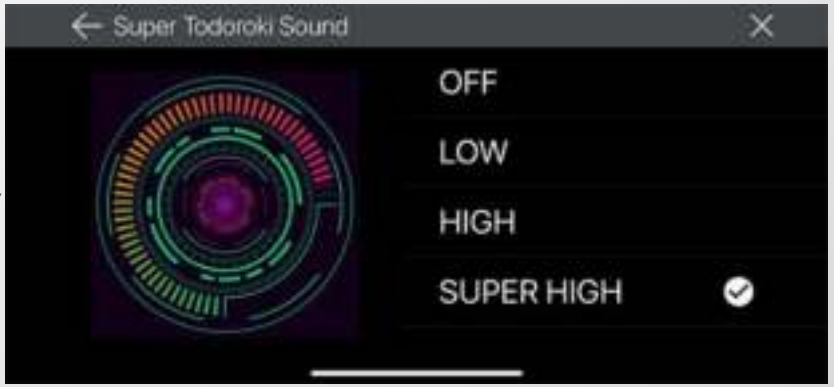

For well-balanced, powerful and clear bass sound.

Live Simulation Sound Effect

Sound field control and sound effect control features give the sense that you are listening to music at a live concert.

Extra features (require optional kits)

Monitoring vehicle performance

By connecting your Android smartphone or iPhone device via Bluetooth® to a compatible OBD-II code reader * (not Pioneer product) and plugged into the vehicle's OBD-II port, you can view more drive information including engine performance, live data and vehicle diagnostic codes to show repair needs.

ND-PS1
Optional parking sensor

Parking assistance *SPH-C10BT only

With Pioneer's parking sensor, a helpful parking assist display appears on your smartphone screen.

**Note: OBD-II code readers are not Pioneer products and Pioneer is not responsible for their use. There may be risks in the case of faulty performance of an OBD-II code reader including potential vehicle battery drain or introducing security vulnerabilities. Research the benefits and risks of using an OBD-II code reader before connecting one to your vehicle. Not all vehicle data may display depending on the vehicle model. Data displayed through Pioneer Smart Sync may be inaccurate due to communication errors or delays, or performance issues with the OBD-II code reader, Pioneer Smart Sync, or the vehicle.*

Pioneer Smart Sync App Keeps Updating

For more details visit
https://www.pioneer-carglobal.com/smartunit/en/

2022

1 Jan	2 Feb	3 Mar	4 Apr	5 May	6 Jun	7 Jul	8 Aug	9 Sep	10 Oct	11 Nov	12 Dec
Ver. 4.0			Ver. 4.1						Ver. 4.2		Ver. 4.3

- Compatible with OBD dongle
- Alexa all languages
- Customize display position on Dash mode

- Correspondence to connection wizard
- Support media services with Alexa
- Add the Power Saving mode

- Account registration
- All areas
- Direct contact via the app
- Japan, US, UK, India, Australia

- Newly added “Driver Pilot Mode” and “Personal Photo Mode”

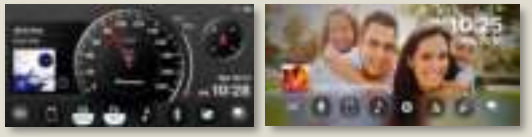

- Newly key layout for simplified operation

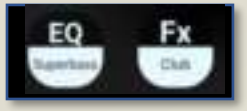

Reinforcement of Usability & Users Support

Entertainment

New 2 New UI design to make your driving more fun

New Driver Pilot Mode

New Personal Photo Mode

Existing modes

Music

Dash

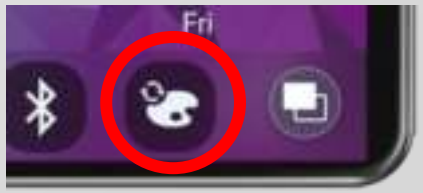

Tap here to switch the mode

New

Driver Pilot Mode

Top 1 selection at a recent users’ survey.
Large speedometer design brings you better visibility of the speed and more fun experience !

① Speedometer*
② Switchable display (km/h⇔MPG)
③ Average speed during using the app
④ Altimeter* 0 to max 1,000m or ft
⑤ Altitude indicator
⑥ Compass*
⑦ Music information
⑧ UI Mode change

* Using smartphone’s GPS, may differ from actual

New

Personal Photo Mode

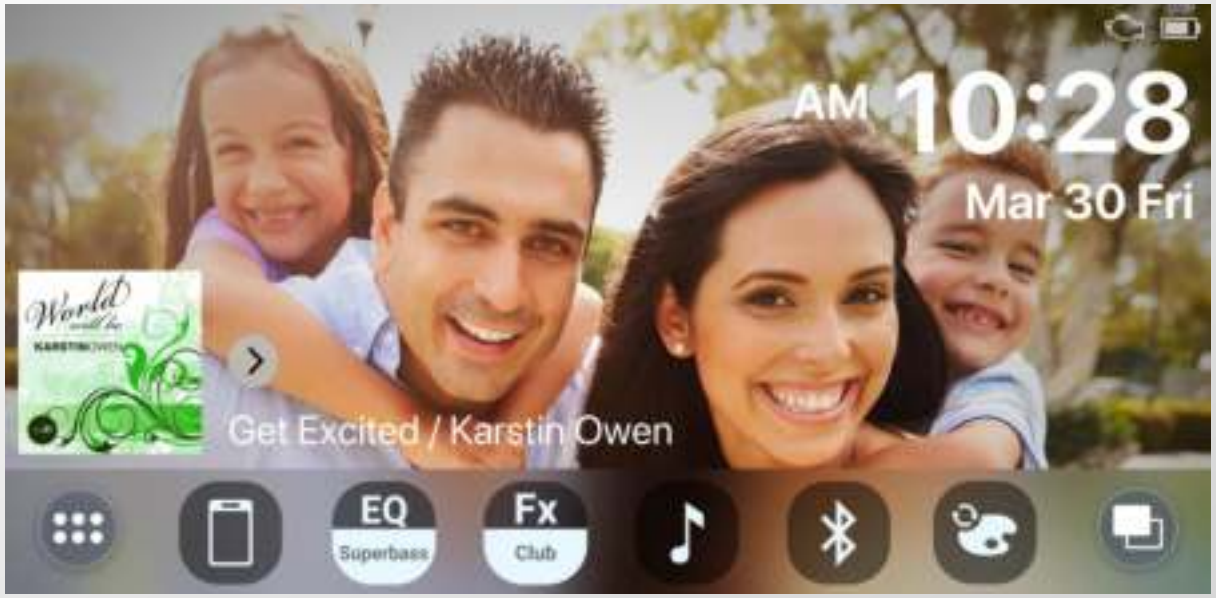

You can decorate your car’s interior with your own images.
Easy customization realizes your driving time to be become more personal.

Long-push on the screen,
Select the image from your thumbnail

New Short cut key to call various sound effects easily

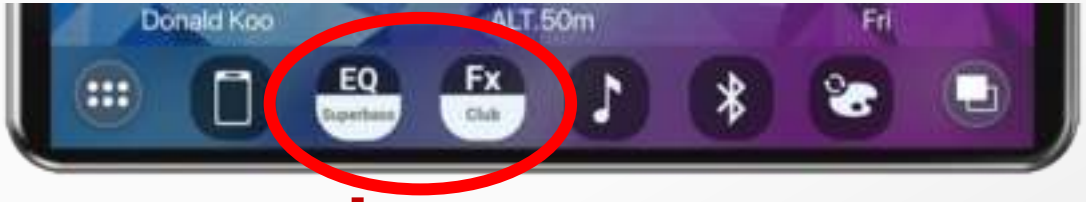

Sound Effects

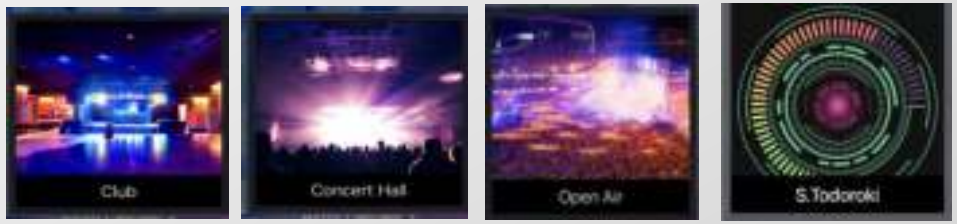

Flat / Café / Club / Concert Hall / Open Air / Super Todoroki

Sound Equalizer

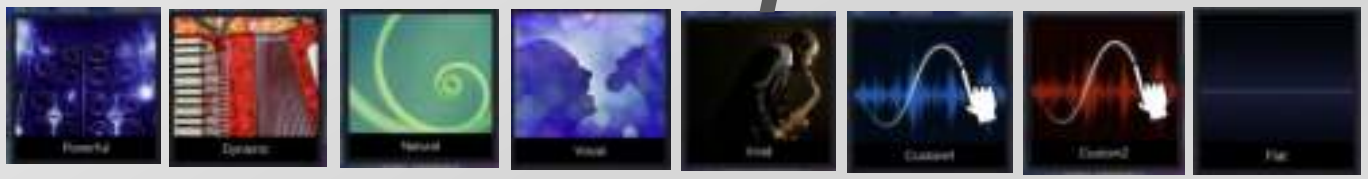

Superbass/ Powerful / Dynamic / Natural / Vocal / Vivid
Custom1 / Custom2 /Flat

New Account registration (optional)

Users can get the latest info easily & quickly once Pioneer introduces new features or special programs for Pioneer Smart Sync.

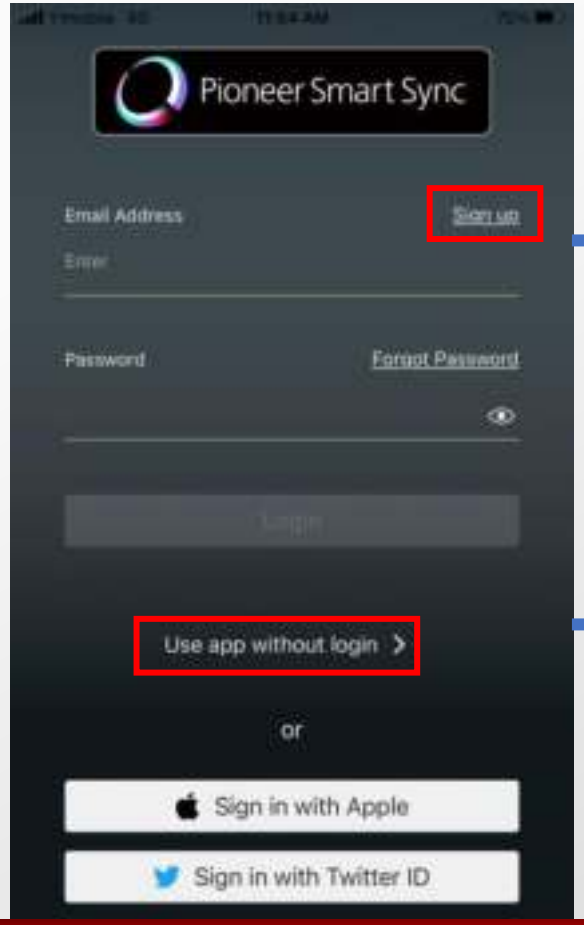

Sign-up
Email address or
Other registry info

Input profile (optional)

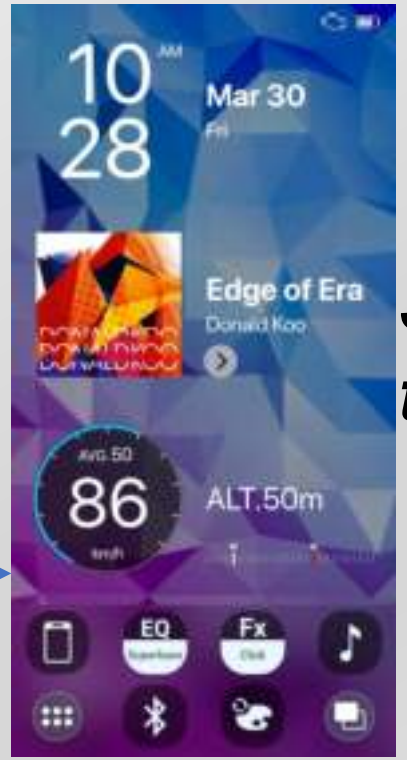

Start the app

You can still use the app without sign-up/login

New “Contact Us” directly from the app limited areas only

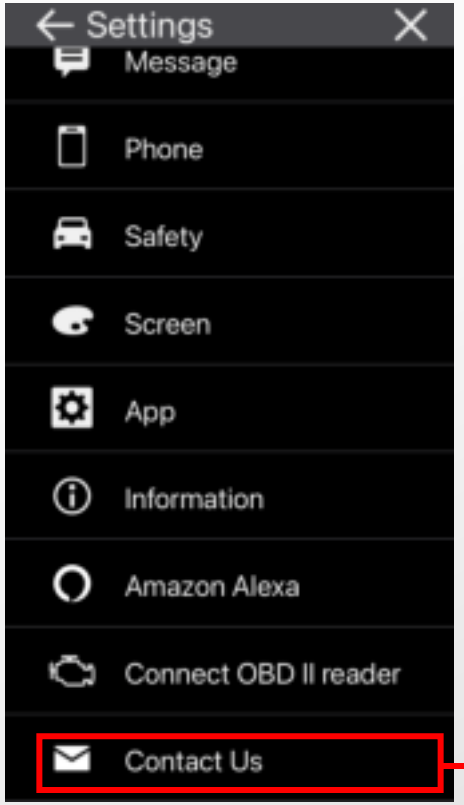

Area: Japan, US, UK, India, Australia (As of ‘22 Dec)

- Have questions? Need help with Pioneer Smart Sync? Contact us directly from the app.
- Receive inquiries from the app by e-mail and reply by e-mail. Compatible with existing operation flow.
  - Supported languages: Japanese and English.
  - The country is determined by the SIM info of the smartphone.

*User does not need to register for an account to make user inquiries.

Receiver's Firmware Update

For better behavior of the receiver, Pioneer recommends the users to keep the firmware (FW) of the radio to be the latest one.

Click your area
for the latest information
and getting new FW.

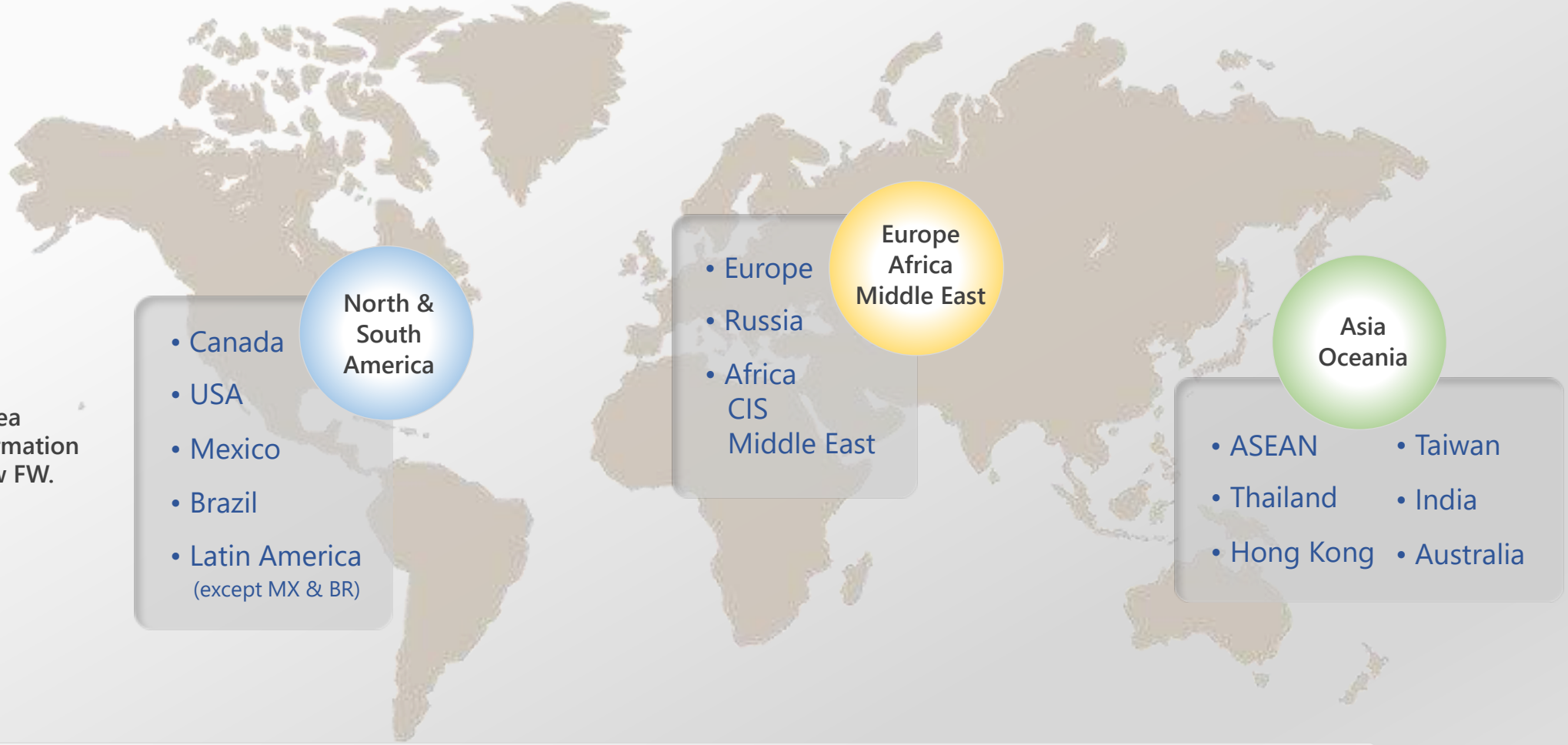

- Latest FW version was released in January 2022. (as of Nov. '22)
- Required item to perform the update: A USB storage device with 2GB or larger capacity, formatted to FAT32 Blank (should not contain any other files)

SPH-C10BT Smartphone Receiver

Pioneer Smart Sync

Made for iPhone

Compatible with Android

Bluetooth

USB

2 RCA pre-outs

MOSFET 50W x 4

flac

1.5A USB QUICK CHARGE

Rear Panel

Note: Smartphone not included with SPH-C10BT. Pioneer Smart Sync App download required.

Key Selling Points

1. Provides safer and easier access to your smartphone apps.
2. Safety features, such as voice recognition and parking assistance, support safe driving.
3. Greater variety of sound effects and sound adjustments.

Features that Support Your Safety

Pioneer Smart Sync

SPH-C10BT is equipped with Parking Assistance and other valuable safety features.

Parking Assistance*

With Pioneer's parking sensor, a helpful parking assist display appears on your smartphone screen.

* Optional parking sensor is required.

ND-PS1
Parking Sensor
(optional)

Impact Detection

If a powerful impact is detected by your smartphone sensor, Pioneer Smart Sync will notify a registered emergency contact.

WARNING:
- Only use a function when it is safe and legal in your location, pay attention to the road and your surroundings, limit glances to the device, and obey all traffic rules.
- Distracted driving may result in serious injury, including death.
- Driver support functions are intended solely to assist the driver.
- They do not detect all dangers and obstacles or substitute for your judgment and careful attention.

Greater Variety of Sound Effects to Enjoy

Pioneer Smart Sync

Various sound adjustment features allow you to boost the sound quality.

31-Band EQ

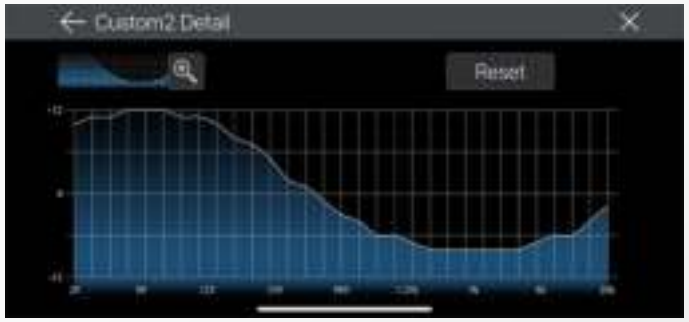

Makes possible precise adjustment of equalizer settings. Handy preset EQ settings are provided, too.

Easy Sound Fit (Time Alignment)

For aligned sound performance from each speaker, simply select the vehicle type—all it takes is a single touch.

Super “Todoroki” Sound

For well-balanced, powerful and clear bass sound.

Live Simulation Sound Effect

Sound field control and sound effect control features give the sense that you are listening to music at a live concert. Preset effects include Stadium, Live House, Hall, and others.

Digital Media Receivers
CD Receivers

DIGITAL MEDIA RECEIVERS

KEY FEATURES STEP-UP COMPARISON CHART

1 / 2

		MVH-S425BT	MVH-S325BT	MVH-S215BT	MXT-S216BT	MVH-S125UI	MVH-85UB
Smartphone Integration	Built-in Bluetooth®*1	HFP A2DP AVRCP SPP	HFP A2DP AVRCP SPP	HFP A2DP AVRCP SPP	HFP A2DP AVRCP SPP		
	Direct Control for iPod/iPhone					USB	
	Direct Control for iPhone	USB Bluetooth	USB Bluetooth				
	Direct Control for Certain Android Phones	USB	USB	USB	USB	USB	USB
	Pioneer Smart Sync	Pioneer Smart Sync	Pioneer Smart Sync				
	Pioneer ARC					iPhone Android	
Display & Illumination	Display with LED Backlight	LARGER VA LCD (2-Line)	LARGER VA LCD (2-Line)	8-CHARACTER VA LCD (1-Line)	8-CHARACTER VA LCD (1-Line)	13-CHARACTER VA LCD (1-Line)	LCD (1-Line)
	Color Customization						

*1. HFP = Hands-Free Profile, A2DP = Advanced Audio Distribution Profile, AVRCP = Audio/Video Remote Control Profile, SSP = Secure Simple Profile.
Please refer to instruction manual for other information about profile compatibility.

DIGITAL MEDIA RECEIVERS

KEY FEATURES STEP-UP COMPARISON CHART

2 / 2

		MVH-S425BT	MVH-S325BT	MVH-S215BT	MXT-S216BT	MVH-S125UI	MVH-85UB
Audio	Audio Codec	MP3 WMA WAV AAC*2 FLAC*3	MP3 WMA WAV AAC*2 FLAC*3	MP3 WMA WAV FLAC*3	MP3 WMA WAV FLAC*3	MP3 WMA WAV	MP3 WMA WAV FLAC*3
	Dynamic Bass Enhancer	BASS	BASS				
	Bass Boost					Bass Boost (Direct Key Access)	Bass Boost
	MIXTRAX	MIXTRAX*4	MIXTRAX*4			MIXTRAX	
Basic Functions	CD Player						
	USB Port*5	*6	*6	*6	*6	*6	*6
	Preout	2 RCA (2V)	1 RCA (2V)	1 RCA (2V)	1 RCA (2V)	2 RCA (2V)	1 RCA (2V)
Others	USB Quick Charge for Android (CDP)	1.5A USB QUICK CHARGE	1.5A USB QUICK CHARGE				
	Karaoke Function						

*2. iTunes AAC Playback: AAC player can decode only AAC files ripped and encoded using iTunes; they cannot decode AAC DRM files downloaded from iTunes music store. AAC: AAC is a short for Advanced Audio Coding and refers to audio compression technology standard used with MPEG-4.
*3. For the files stored in USB thumb drive.
*4. Must be used through Pioneer Smart Sync app when accessing a playback source from iPhone.
*5. Pioneer cannot guarantee compatibility with all USB mass storage devices and assumes no responsibility for any loss of data on media players, smart phones, or other devices while using receiver.
*6. Please use CD-U50E USB extension cable if a direct connection causes a USB Device to protrude from the receiver in a way that can interfere with driving.

CD RECEIVERS

KEY FEATURES STEP-UP COMPARISON CHART

1 / 2

		FH-S725BT	FH-S525BT	DEH-S5250BT	DEH-S4250BT	DEH-S22250UI	DEH-S1250UB
Smartphone Integration	Built-in Bluetooth®*1	HFP A2DP AVRCP SPP	HFP A2DP AVRCP SPP	HFP A2DP AVRCP SPP	HFP A2DP AVRCP SPP		
	Direct Control for iPod/iPhone					USB	
	Direct Control for iPhone	USB Bluetooth		USB Bluetooth	USB Bluetooth		
	Direct Control for Certain Android Phones	USB	USB	USB	USB	USB	USB
	Pioneer Smart Sync	Pioneer Smart Sync	Pioneer Smart Sync *2	Pioneer Smart Sync	Pioneer Smart Sync		
	Pioneer ARC					iPhone Android	Android
Display & Illumination	Display with LED Backlight	WIDENED 12+1 VA LCD (2-Line)	LARGER VA LCD (2-Line)	LARGER VA LCD (2-Line)	LARGER VA LCD (2-Line)	8-CHARACTER VA LCD (1-Line)	8-CHARACTER VA LCD (1-Line)
	Color Customization	210,000 COLORS *3 (Separated)		210,000 COLORS *3 (Separated)		210,000 COLORS *3 (Separated)	

*1. HFP = Hands-Free Profile, A2DP = Advanced Audio Distribution Profile, AVRCP = Audio/Video Remote Control Profile, SSP = Secure Simple Profile.
Please refer to instruction manual for other information about profile compatibility.
*2. FH-S525BT is only compatible for Android.
*3. Colors for key illumination and display are separately adjustable.

CD RECEIVERS

KEY FEATURES STEP-UP COMPARISON CHART

2 / 2

		FH-S725BT	FH-S525BT	DEH-S5250BT	DEH-S4250BT	DEH-S22250UI	DEH-S1250UB
Audio	Audio Codec	MP3 WMA WAV AAC*4 FLAC*5	MP3 WMA WAV FLAC*5	MP3 WMA WAV AAC*4 FLAC*5	MP3 WMA WAV AAC*4 FLAC*5	MP3 WMA WAV	MP3 WMA WAV
	Dynamic Bass Enhancer	BASS	BASS	BASS	BASS		
	Bass Boost					Bass Boost (Direct Key Access)	Bass Boost (Direct Key Access)
	MIXTRAX	MIXTRAX*6 FLASHING COLOR	MIXTRAX	MIXTRAX FLASHING COLOR	MIXTRAX*6	MIXTRAX FLASHING COLOR	MIXTRAX
Basic Functions	CD Player	CD	CD	CD	CD	CD	CD
	USB Port*7	*8	*8	*8	*8	*8	*8
	Preout	3 RCA pre-out (2V)	2 RCA pre-out (2V)	2 RCA pre-out (2V)	2 RCA pre-out (2V)	2 RCA pre-out (2V)	2 RCA pre-out (2V)
Others	USB Quick Charge for Android (CDP)	1.5A USB QUICK CHARGE	1.5A USB QUICK CHARGE	1.5A USB QUICK CHARGE	1.5A USB QUICK CHARGE	1.5A USB QUICK CHARGE	1.5A USB QUICK CHARGE *9
	Karaoke Function	Karaoke	Karaoke	Karaoke (Voice Cancel)	Karaoke (Voice Cancel)		

*4. iTunes AAC Playback: AAC player can decode only AAC files ripped and encoded using iTunes; they cannot decode AAC DRM files downloaded from iTunes music store. AAC: AAC is a short for Advanced Audio Coding and refers to audio compression technology standard used with MPEG-4.
*5. For the les stored in USB thumb drive.
*6. Must be used through Pioneer Smart Sync app when accessing a playback source from iPhone.
*7. Pioneer cannot guarantee compatibility with all USB mass storage devices and assumes no responsibility for any loss of data on media players, smart phones, or other devices while using receiver.
*8. Please use CD-U50E USB extension cable if a direct connection causes a USB Device to protrude from the receiver in a way that can interfere with driving.
*9. For CS ver. only.

Bluetooth® & Pioneer Smart Sync Lineup

Digital Media Receivers

CD Receivers

MVH-S325BT

Digital Media Receiver with Pioneer Smart Sync App Compatibility, MIXTRAX®, and Built-in Bluetooth®

Remote Control Included

Rear Panel

Pioneer Smart Sync | MIXTRAX | Bluetooth | USB | 1.5A USB QUICK CHARGE | Made for iPhone | Compatible with Android

flac | RCA | BASS | DIRECT REMOTE INPUT | SHORT WAVE * | DETACHABLE FACE SECURITY

*For GS ver. only

Key Selling Points

1. Pioneer Smart Sync App delivers superior smartphone connectivity and great in-car entertainment.
2. Great connectivity to various media. Wireless audio playback via Bluetooth®.
3. Shallow chassis depth offers greater flexibility in installation.

MVH-S425BT

2-DIN Digital Media Receiver with Pioneer Smart Sync App Compatibility, MIXTRAX®, and Built-in Bluetooth®

Remote Control Included

Pioneer Smart Sync

MIXTRAX

Bluetooth

USB

Made for iPhone

Compatible with Android

1.5A USB QUICK CHARGE

flac

2 RCA pre-outs

BASS

DIRECT REMOTE INPUT

SHORT WAVE *

*For GS ver. only.

Rear Panel

Key Selling Points

1. Pioneer Smart Sync App delivers superior smartphone connectivity and great in-car entertainment.
2. Great connectivity to various media. Wireless audio playback via Bluetooth®.
3. Shallow chassis depth offers greater flexibility in installation.

DEH-S5250BT

Audio Receiver with Pioneer Smart Sync App Compatibility, MIXTRAX®, Built-in Bluetooth®, and Color Customization

Remote Control Included

Pioneer Smart Sync · MIXTRAX · Bluetooth · USB · 1.5A USB QUICK CHARGE · Made for iPhone · Compatible with Android · flac · 2 RCA pre-outs · BASS · SHORT WAVE *

Rear Panel

*For GS ver. only

DEH-S4250BT

Audio Receiver with Pioneer Smart Sync App Compatibility, MIXTRAX®, and Built-in Bluetooth®

Remote Control Included

Pioneer Smart Sync · MIXTRAX · Bluetooth · USB · 1.5A USB QUICK CHARGE · Made for iPhone · Compatible with Android · flac · 2 RCA pre-outs · BASS · SHORT WAVE *

Rear Panel

*For GS ver. only

Key Selling Points

1. Pioneer Smart Sync App delivers superior smartphone connectivity and great in-car entertainment.
2. Great connectivity to various media. Wireless audio playback via Bluetooth®.
3. Superior audio performance with enhanced audio functions. Time Alignment , 31-Band EQ, FLAC codec playback and Dynamic Bass Enhancer.

FH-S725BT

2-DIN Audio Receiver with Pioneer Smart Sync App Compatibility, MIXTRAX®, and Built-in Bluetooth®

Remote Control Included

Rear Panel

FH-S525BT

2-DIN Audio Receiver with Pioneer Smart Sync App Compatibility, MIXTRAX®, and Built-in Bluetooth®

Remote Control Included

Rear Panel

Common: Pioneer Smart Sync, MIXTRAX, Bluetooth®, USB, 1.5A USB QUICK CHARGE, Compatible with Android, flac, BASS, DIRECT REMOTE INPUT, SHORT WAVE*, Karaoke

*For GS ver. only

Made for iPhone, Separated Color, 3 RCA pre-outs, Hi-VOLT

2 RCA pre-outs

Key Selling Points

1. Pioneer Smart Sync App delivers superior smartphone connectivity and great in-car entertainment.
2. Great connectivity to various media. Wireless audio playback via Bluetooth®.
3. Superior audio performance with enhanced audio functions. Time Alignment , 31-Band EQ, FLAC codec playback and Dynamic Bass Enhancer.

Built-in Bluetooth®

A Pioneer receiver with Built-in Bluetooth Wireless Technology not only makes Bluetooth hands-free function easy and safe to operate while driving—it also extends your enjoyment of wireless audio control and streaming.

	No. of BT phones available for pairing	No. of BT phones connectable simultaneously	No. of BT Audio connectable simultaneously
FH-S525BT	Up to 10	Up to 2	Up to 5
MVH-S425BT	Up to 10	Up to 2	Up to 5
MVH-S325BT	Up to 10	Up to 2	Up to 5
DEH-S5250BT	Up to 10	Up to 2	Up to 5
DEH-S4250BT	Up to 10	Up to 2	Up to 5

Manual Time Alignment

Utilizing Time Alignment function, you can adjust speaker output timing, so that sound from all speakers reaches the driver's ears in perfect sync.

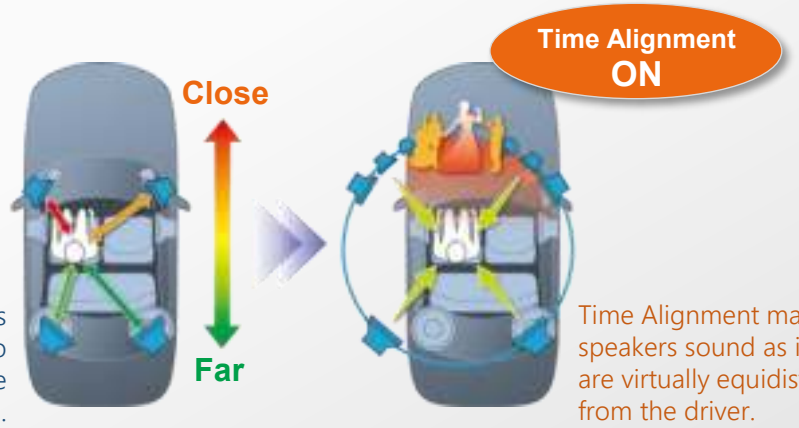

The different distances from each speaker to the driver cause the delay of sound.

Time Alignment makes all speakers sound as if they are virtually equidistant from the driver.

Support FLAC Codec*

Pioneer audio receiver upgrades in-car audio with amazingly brilliant reproduction of sound by FLAC files surpass CD tracks in terms of playback audio quality.

* For the files stored in USB thumb drive.

3-Way Network Mode

MVH-S425BT FH-S725BT

Connect (via three preouts) up to three external amplifiers, for more distinct separation among high-, mid- and low-frequency ranges, and more natural sound that fully realizes each speaker's potential.

13-Band EQ and Presets

The 13-Band Equalizer allows detailed adjustments to acoustic settings . Various EQ presets ensure that users with only basic acoustic knowledge can learn and enjoy the advantages of using an EQ.

* 31-Band EQ is available when the receiver is linked with the Pioneer Smart Sync app.

Dynamic Bass Enhancer

Pioneer Audio Receivers enrich bass depth and use Pioneer original technology to provide more dynamic, punchy sound.

■ Reproduction of Missing Fundamentals

The unique audio processing restores fundamental qualities that may be missing from the original sound, allowing you to hear bass sound quality that surpasses the depths of low-frequency sound that speakers can actually emit. From even small speakers, you can feel the impression of heavy bass that you typically hear from larger speakers.

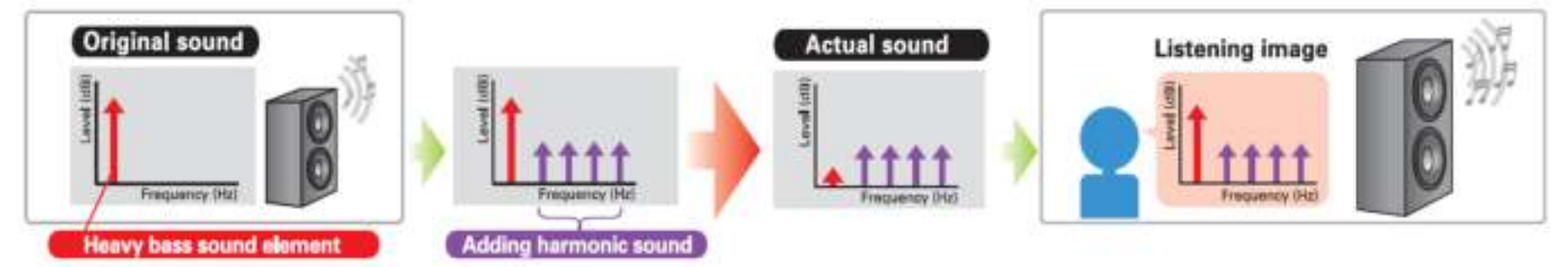

■ Emphasizing Kick Sound

By increasing specific amplitude, you can experience the kick sound sensation of punchy beat.

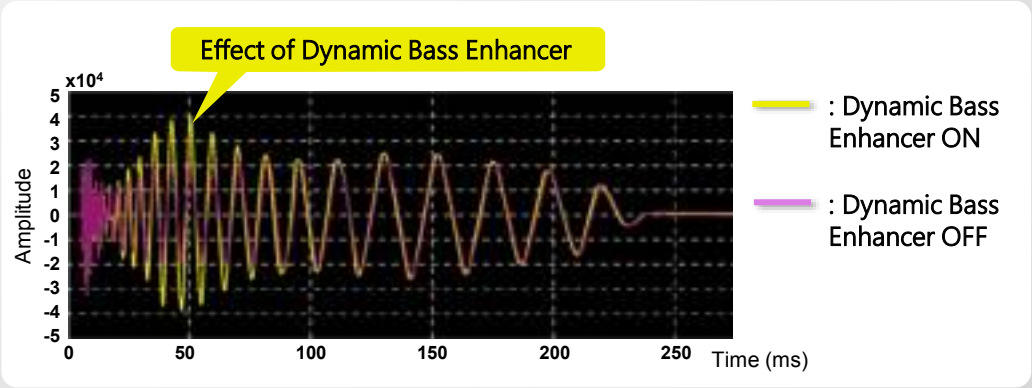

■ Smooth Hard Key Operation

Bass Boost Key*

Just press Bass Boost key to activate Dynamic Bass Enhancer effect.

* Except MVH-MS510BT and MVH-MS410BT.

Karaoke Function

MVH-S425BT | DEH-S5250BT | DEH-S4250BT | FH-S525BT

Just connect a microphone* with a Pioneer audio receiver. Then, you can sing along, karaoke-style, with your amplified voice accompanied by your favorite music playing from compatible digital audio sources** in the vehicle.

* Microphone is not included with Pioneer receiver.
** From CD, iPhone, certain Android phones, USB device, and Bluetooth® wireless audio

■ Karaoke Vocal Cancel

"Vocal Cancel*" is a Karaoke function designed to remove the vocals from music.
Applicable sources: CD, iPhone, USB, Bluetooth® Audio, Pioneer Smart Sync App

* Depending on the mix of the music, some traces of the vocal track may remain.

Anti-Dust Design*

Pioneer heat release structure can reduce ventilation holes & clearance gaps. The results are optimally efficient heat dissipation and prevention of entry of dust that can cause malfunction.

* The effect might change depending on the environment of the car.

Anti-Dust Structure Image

Non-anti-dust design

Anti-dust design

Pioneer Smart Sync Technology

Pioneer Smart Sync

It's a highly evolved technology that links your smartphone to Pioneer car audio and entertainment systems. Fully utilizing the power of your smartphone, it expands, evolves and furthers the enjoyment of every moment you spend in your car.

For more details visit
https://www.pioneer-carglobal.com/smartunit/en/

Lineup and App

Pioneer Smart Sync

Pioneer Smart Sync technology is built into many Pioneer audio receivers.

Download on the App Store

GET IT ON Google Play

Quick and Safe Access to Your Smartphone Apps

Pioneer Smart Sync

Get easy access to the apps you need right away without reaching for your smartphone's home button—a safer way to enjoy music and more on every drive.

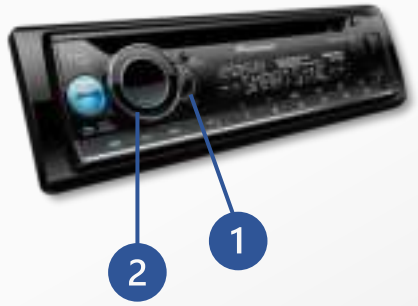

1 One-touch access to various major navi apps

2 Rotary key control to read Messages out

Features that Support Your Safety

Pioneer Smart Sync

If a powerful impact is detected by your smartphone sensor, Pioneer Smart Sync will notify a registered emergency contact.

WARNING:
- Only use a function when it is safe and legal in your location, pay attention to the road and your surroundings, limit glances to the device, and obey all traffic rules.
- Distracted driving may result in serious injury, including death.
- Driver support functions are intended solely to assist the driver.
- They do not detect all dangers and obstacles or substitute for your judgment and careful attention.

Impact Detection

Greater Variety of Sound Effects to Enjoy

Pioneer Smart Sync

Pioneer Smart Sync App gives you many more ways to enjoy music than with receiver alone.

31-Band EQ

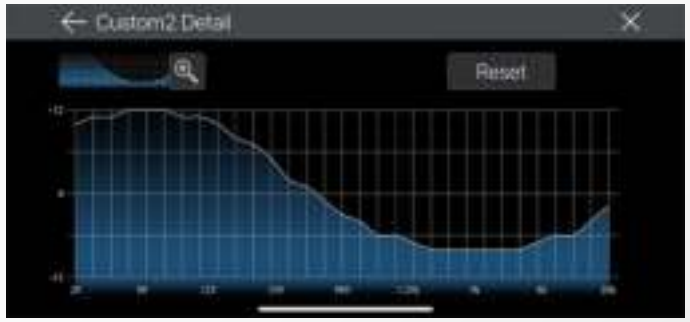

Customize your music with fine adjustments. Or use the many presets to enjoy various sound reproduction.

Easy Sound Fit (Time Alignment)

With one touch, you select your vehicle type and this feature optimally aligns the output timing of the various speakers in your car.

Super “Todoroki” Sound

Dynamic bass enhancement from the integrated performance of the Pioneer Smart Sync App and receiver EQ. Special low-range digital processing and mid-range and high-range adjustment delivers deep and rich bass sound and contrast.

Live Simulation Sound Effect

Digital effect processing and SE missing applies the sensation of a live performance to your music. Presets include Stadium, Live House, Hall, and more.

Entry Lineup

Digital Media Receivers

CD Receivers

MVH-S215BT

Digital Media Receiver with Built-in Bluetooth®, and Direct Control for Certain Android Phones

Remote Control Included

Bluetooth

USB

Compatible with Android

flac

1 RCA pre-out

Rear Panel

Compact Chassis Design

The shallow depth of the chassis of new MVH series receiver provides for optimal ease and flexibility of installation.

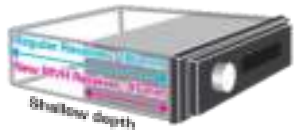

MXT-S216BT

Digital Media Receiver with Built-in Bluetooth®, Direct Control for Certain Android Phones, and Speakers Included (16 cm Speakers)

Remote Control Included

Bluetooth

USB

Compatible with Android

flac

1 RCA pre-out

Rear Panel

Compact Chassis Design

The shallow depth of the chassis of new MVH series receiver provides for optimal ease and flexibility of installation.

Built-in Bluetooth®

A Pioneer receiver with Built-in Bluetooth Wireless Technology not only makes Bluetooth hands-free function easy and safe to operate while driving—it also extends your enjoyment of wireless audio control and streaming.

	No. of BT phones available for pairing	No. of BT phones connectable simultaneously	No. of BT Audio connectable simultaneously
MVH-S215BT	1	1	1

Support FLAC Codec*

Pioneer audio receiver upgrades in-car audio with amazingly brilliant reproduction of sound by FLAC files surpass CD tracks in terms of playback audio quality.

* For the files stored in USB thumb drive.

MVH-S125UI

Digital Media Receiver with ARC App Compatibility, and MIXTRAX®

Remote Control Included

Pioneer ARC

MIXTRAX

USB

Made for iPhone | iPad

Compatible with Android

1 RCA pre-out

Rear Panel

Compact Chassis Design

The shallow depth of the chassis of new MVH series receiver provides for optimal ease and flexibility of installation.

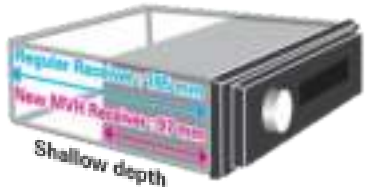

Key Selling Points

1. Pioneer ARC App offers intuitive and easy control of the audio receiver.
2. Enjoy your favorite tunes with special audio feature, MIXTRAX and Bass Boost.
3. Shallow chassis depth offers greater flexibility in installation.

MVH-85UB

Digital Media Receiver with Direct Control for Certain Android Phones

Remote Control Included

USB

Compatible with Android

flac

RCA pre-out

Rear Panel

Compact Chassis Design

The shallow depth of the chassis of new MVH series receiver provides for optimal ease and flexibility of installation.

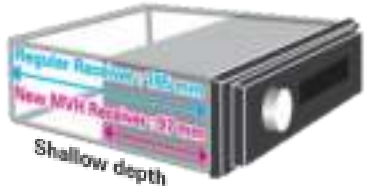

Key Selling Points

1. Enjoy your favorite tunes with special audio feature, MIXTRAX and Bass Boost.
2. Shallow chassis depth offers greater flexibility in installation.

DEH-S2250UI

Audio Receiver with ARC App Compatibility, MIXTRAX®, and Color Customization

Remote Control Included

Pioneer ARC

Made for iPhone | iPad

Compatible with Android

USB

1.5A USB QUICK CHARGE

Separate Color

2 RCA pre-outs

VIDEO INPUT

SHORT WAVE

*1 DETACHABLE FACE BUSHING

Rear Panel

DEH-S1250UB

Audio Receiver with ARC App Compatibility, and MIXTRAX®

Remote Control Included

Pioneer ARC

MIXTRAX

Compatible with Android

USB

1.5A USB QUICK CHARGE *2

2 RCA pre-outs

VIDEO INPUT

SHORT WAVE *1

DETACHABLE FACE BUSHING

Rear Panel

*1. For GS ver. only. *2. For CS ver. only

MIXTRAX

MIXTRAX

Innovative Pioneer technology that creates a Non-Stop MIX with a range of DJ-inspired effects.

MIXTRAX Benefit MIXTRAX EZ

Pioneer applied its unique expertise to keep car entertainment flowing smoothly without interruption, so you can experience the intimate euphoria of listening to music that sounds as if a club DJ is there playing it.

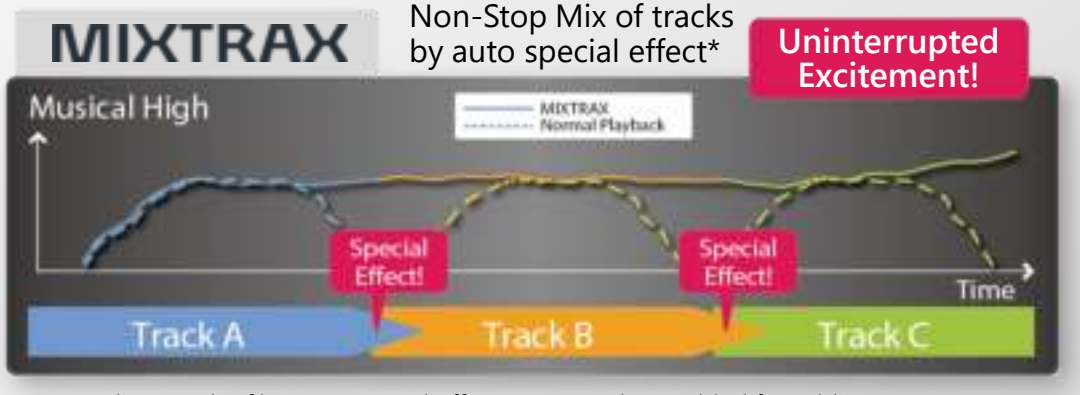

* Depending on the file/song, sound effects may not be enabled for adding.
* Except MVH-85UB

BASS Boost Key

A Bass boost key* integrated into the faceplate allows you to pump up the bass range at a touch without having to access an audio menu.

* Switches BASS boost on/off only. The BASS boost level may be adjusted from the audio menu.

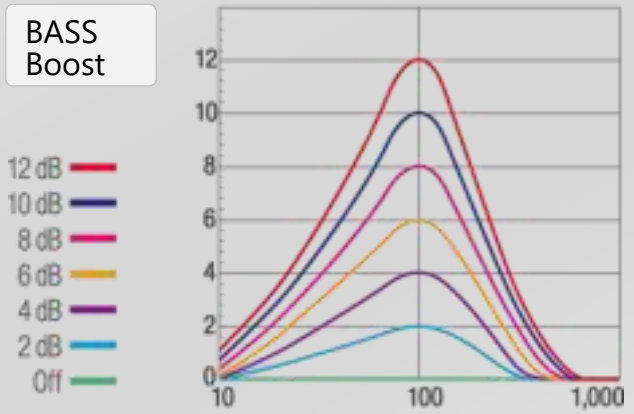

Pioneer ARC

DEH-S2250UI DEH-S1250UB

Pioneer ARC

Pioneer ARC app allows you to use your smartphone to control select functions on your Pioneer receiver, including presets, fast forward and rewind, and artist and album search. You can download the app from the App Store and Google Play™.

Download on the App Store

GET IT ON Google Play

- For compatible iPod/iPhone devices. This function is compatible with iPhone and iPod touch devices operating iOS 8.0 or later.
- For Bluetooth connections, this function is compatible with a device that runs Android 4.1 or later and also supports Bluetooth SPP (Serial Port Profile).
- For USB connections, this function is compatible with a phone that runs Android 5.0 or later up to 7.1.2 and also supports AOA (Android Open Accessory) 2.0. However the compatibility depends on the smartphone.
- All of the app display image design can be changed or renewed.

* With some Android devices, AOA connection may not be available.

Swipe Left/Right to Change Tracks

Tap to Play/Pause music

Swipe Up to Source/App select

Swipe Down to Browse music

Two finger rotation to volume control

Pioneer ARC (continued) DEH-S2250UI DEH-S1250UB

■ Browsing and Searching

Radio source and channels of multiple stations are available.

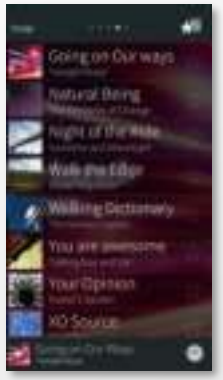

You can also browse files and folders stored on your smartphone and utilize a variety of music apps with on-screen control of a smartphone.

■ Advanced Audio Settings

Dedicated interface is available for Crossover filter setting/Time Alignment/Speaker Level setting.

■ EQ Setting

Conventional Setting

Setting with Pioneer ARC App

Easily adjust and select desired EQ setting.

Easy!

SPECIFICATIONS

AV RECEIVERS FEATURES COMPARISON

Click to open a separate PDF file.

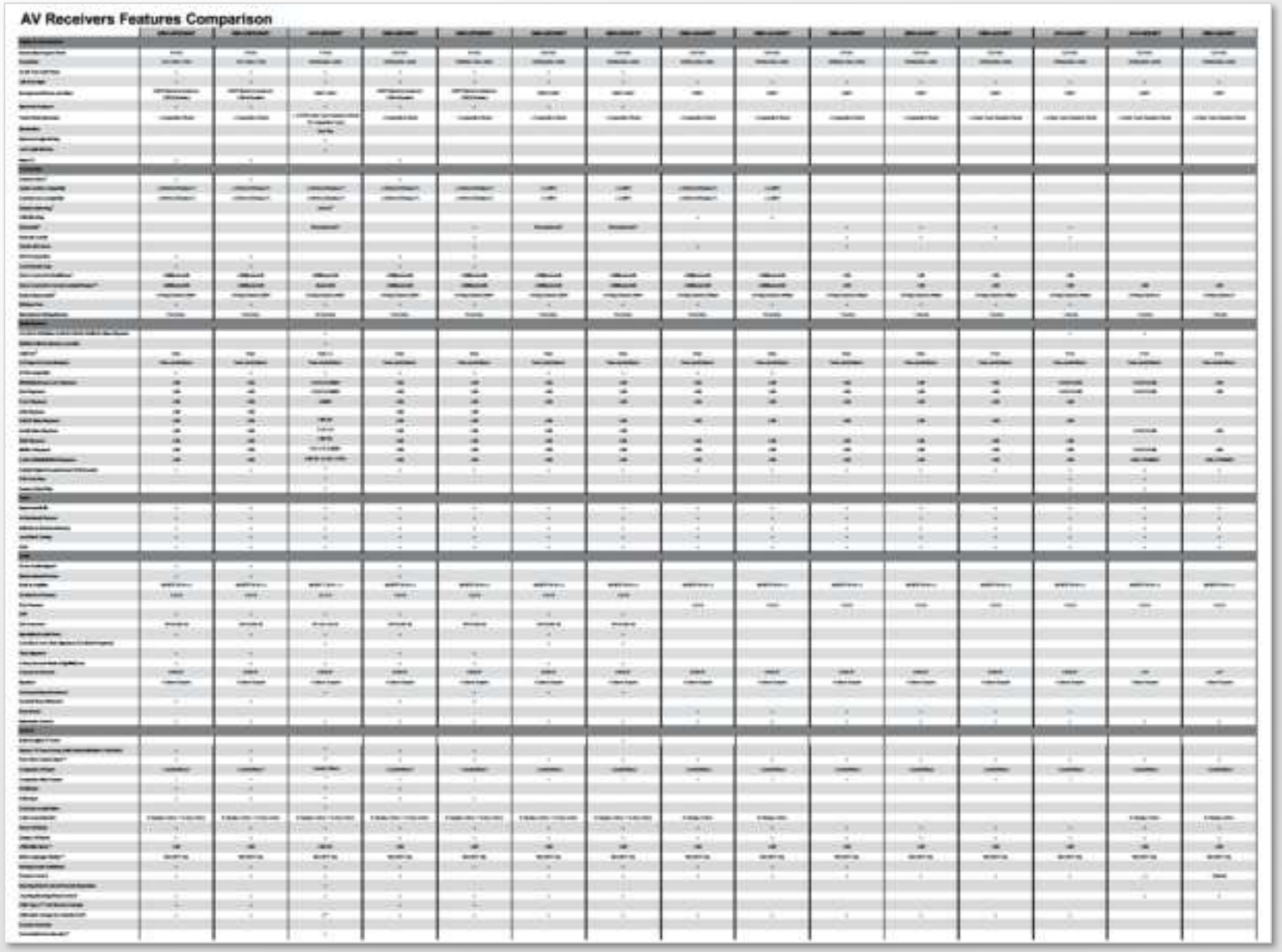

Click to open a separate PDF file.

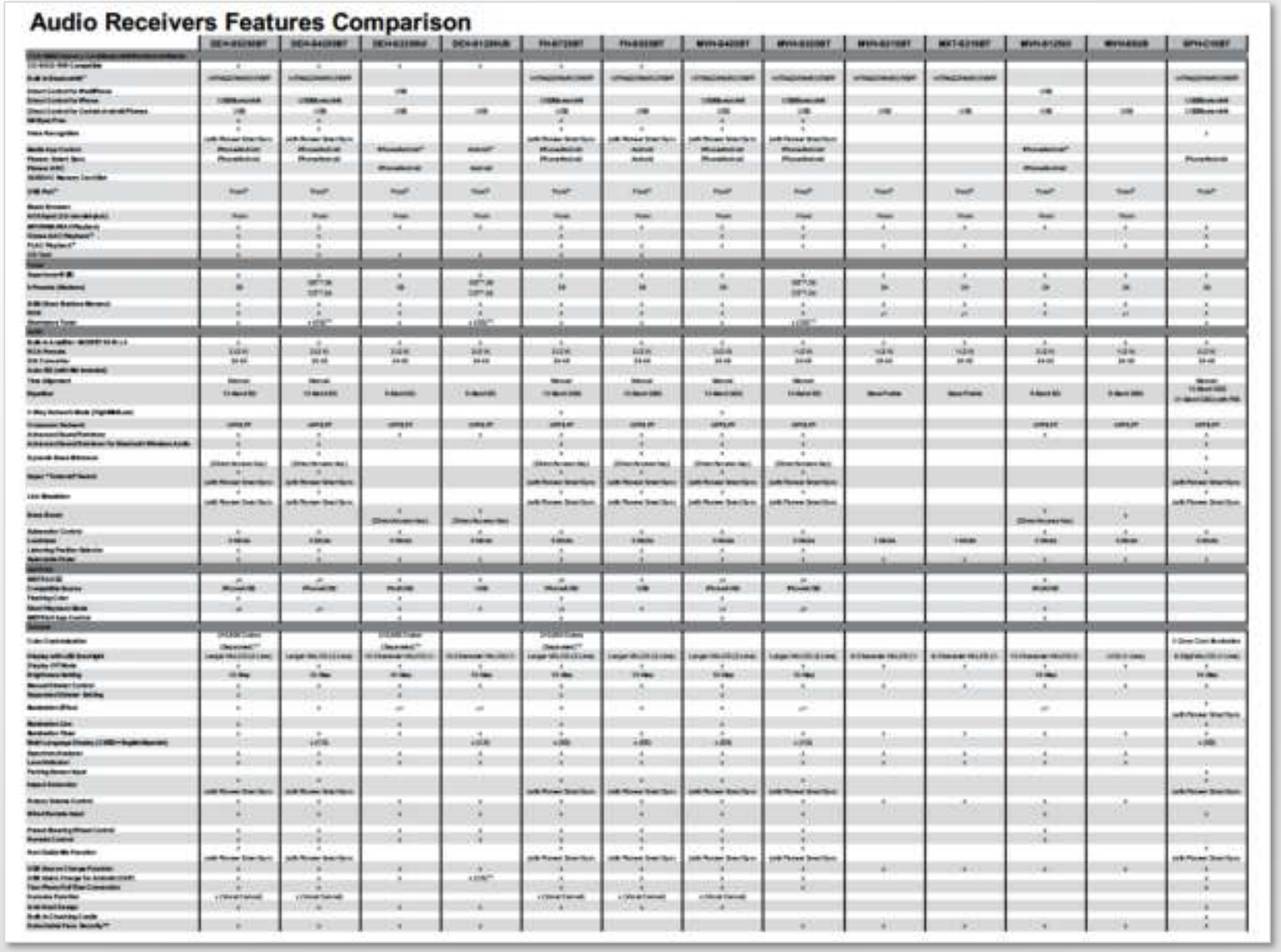

Audio Receivers Features Comparison

SPECIFICATIONS

SYMBOLS FOR SPECIAL FEATURES

Media & Format

- DVD-R/RW Compatible
- CD-R/RW Compatible
- FLAC (Free Lossless Audio Codec) Audio
- microSD™ Card Slot
- Full HD Video Playback

Display

- Capacitive & Flat design
- LED Backlight HD
- LED Backlight WVGA
- Multi-Language Display

Connectivity

- App Store
- Google Play
- Apple CarPlay
- Android Auto
- Alexa built-in
- Made for iPod and iPhone Products
- Made for iPhone Products
- Pioneer Smart Sync
- Smart UI
- CarAVAssist App
- Pioneer ARC
- Compatible with Android
- Wi-Fi Certified
- HDMI
- Mirroring for Android™
- WebLink™
- WebLink Cast™
- Built-in Bluetooth®
- USB Direct Connection
- USB Quick Charge
- Back Up Camera Ready
- Dual Phone Connection

Note: Please refer disclaimers on later pages.

SPECIFICATIONS

SYMBOLS FOR SPECIAL FEATURES

Audio

MIXTRAX	MIXTRAX	Subwoofer control	Subwoofer Control
Hi-VOLT	Hi-Volt Preout	RDS	RDS
3 RCA pre-outs 2 RCA pre-outs 1 RCA pre-out	RCA Preout	SHORT WAVE	Shortwave Tuner
3 WAY NETWORK MODE	3-Way Network Mode	MOSFET 50W x 4	MOSFET 50 W x 4
7 13 31 EQ	Equalizer	Specialized Audio Parts	Specialized Audio Parts
BASS	Dynamic Bass Enhancer	Hi-Res AUDIO	Hi-Resolution Audio
MASTER SOUND REVIVER	Master Sound Reviver		

General

MULTIPLE COLOR	Color Customization	Anti-Dust Design	Anti-Dust Design
Separated Color	Separated Color Customization	Karaoke	Karaoke Function
Steering Wheel Control Ready	Steering Wheel Control Ready	Built-in GPS	Built-in GPS
CUSTOM WALLPAPER	Custom Wall Paper	Vibration	Vibration
DETACHABLE FACE SECURITY	Detachable Face Security	Temperature shock	Temperature shock
WIRED REMOTE INPUT	Wired Remote Input		

Note: Please refer disclaimers on later pages.

SYMBOLS FOR SPECIAL FEATURES

NOTES:

- PIONEER, MIXTRAX, and AppRadio are trademarks or registered trademarks of Pioneer Corporation.
- The Bluetooth® word mark and logos are registered trademarks owned by the Bluetooth SIG, Inc. and any use of such marks by PIONEER CORPORATION is under license. Other trademarks and trade names are those of their respective owners.
- DivX®, DivX Certified® and associated logos are trademarks of DivX, Inc. and are used under license. Playback of a DivX® file in an external storage device (USB Device/SD Memory Card) may initially be slightly delayed or not proceed smoothly, depending on file size or bit rate.
- Dolby, Pro Logic and the double-D symbol are registered trademarks of Dolby Laboratories.
- Apple, the Apple logo, iPhone, iPod, iTunes, Lightning and Siri are trademarks of Apple Inc., registered in the U.S. and other countries. Apple CarPlay is a trademark of Apple Inc.
- App Store is a service mark of Apple Inc., registered in the U.S. and other countries.
- IOS is a trademark or registered trademark of Cisco in the U.S. and other countries and is used under license.
- Google, Android, Google Play, Android Auto and other marks are trademarks of Google LLC.

- Yelp, Yelp logo and related marks are registered trademarks for Yelp.
- Zomato is a trademark of Zomato Ltd.
- The product with the Hi-Res Audio logo is conformed to Hi-Res Audio standard defined by Japan Audio Society. The logo is used under license from Japan Audio Society.
- microSD Logo is a trademark of SD-3C, LLC.

- Use of the Apple CarPlay logo means that a vehicle user interface meets Apple performance standards. Apple is not responsible for the operation of this vehicle or its compliance with safety and regulatory standards. Please note that the use of this product with iPhone, iPod, or iPad may affect wireless performance.
- Use of the Made for Apple badge means that an accessory has been designed to connect specifically to the Apple product(s) identified in the badge and has been certified by the developer to meet Apple performance standards. Apple is not responsible for the operation of this device or its compliance with safety and regulatory standards. Please note that the use of this accessory with an Apple product may affect wireless performance.
- Apple is not responsible for the operation of this device or its compliance with safety and regulatory standards.
- Operations and functions may vary depending on iOS device or receivers.
- iPhone, iPod are trademarks of Apple Inc., registered in the U.S. and other countries.
- AAC players can decode only those AAC files ripped and encoded using iTunes.
- USB Type-C® and USB-C® are registered trademarks of USB Implementers Forum.
- The Wi-Fi CERTIFIED™ Logo is a registered trademark of Wi-Fi Alliance®.
- Amazon, Alexa and all related logos are trademarks of Amazon.com, Inc. or its affiliates.

continues

NOTES: (continued)

- The Adopted Trademarks HDMI, HDMI High-Definition Multimedia Interface, and the HDMI Logo are trademarks or registered trademarks of HDMI Licensing Administrator, Inc. in the United States and other countries.

Not every USB Device is compatible with a Pioneer receiver containing a USB port. Optional USB extension cable is available for use with front USB ports.

* Not all Android devices may be compatible with a Pioneer receiver via the USB port or Bluetooth. Pioneer receivers are compatible with Android UBS MSC (Mass Storage Class) devices only and are not compatible with MTP (Media Transfer Protocol) devices. Certain Bluetooth features may not be supported by all compatible Bluetooth-enabled Android devices, and/or the functionality of such features may be limited in certain devices or by certain wireless carriers.

All other brand, product names, or logos may be trademarks or registered trademarks of their respective holders.

Amplifiers

GM-DX874

Class-FD 4-Channel Bridgeable Amplifier with Bass Boost Remote

1200 W MAX.

Hi-Res AUDIO

Class FD Variable HPF Variable LPF

RCA IN/OUT SPEAKER INPUT Bass Boost Remote 1ohm

Dimensions

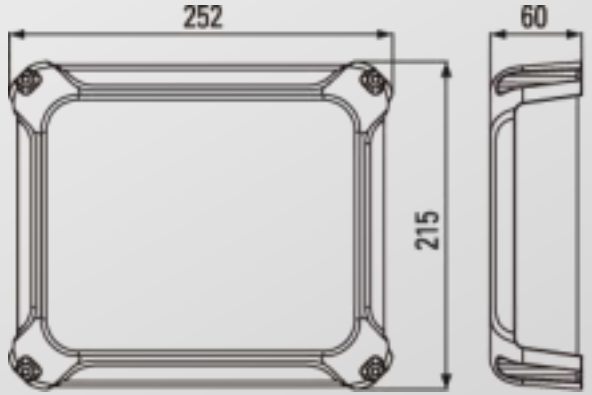

Key Selling Points

1. Compatibility with High-Resolution Audio offers sound reproduction with extraordinarily realistic atmosphere.
2. Superior-quality audio parts and fine acoustic tuning yield outstanding sound quality. A high-capacity audio power source capacitor ensures stable power supply even at high power output.
3. The addition of an aluminum hairline panel on the top plate enhances the high-quality sense of design.

GM-D9705

Class-FD* 5-Channel Amplifier

* For A-Ch. and B-Ch only.

2000 W MAX.

Class FD Variable HPF Variable LPF

RCA INPUT SPEAKER INPUT Bass Boost Remote

Dimensions

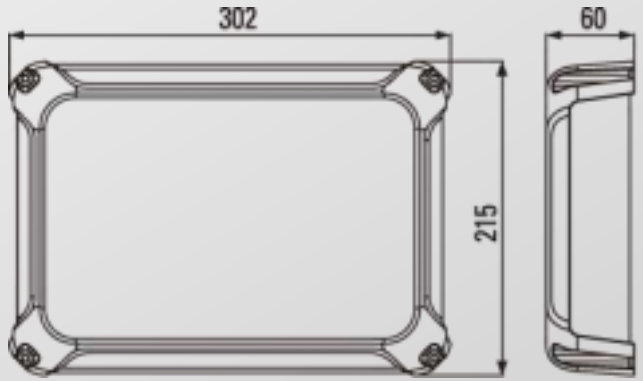

Key Selling Points

1. Various setting and connections expand your choice of system configuration.
2. The versatile 5-channel capability of the GM-D9705 features dedicated subwoofer output for ample power to drive strong bass.
3. Despite the amplifier's compact size, which ensures easy installation, its high output is astonishing.

GM-D9704

Class-FD 4-Channel Bridgeable Amplifier with Bass Boost Remote

1600 W MAX.

Class FD Variable HPF Variable LPF RCA IN/OUT SPEAKER INPUT Bass Boost Remote 1ohm

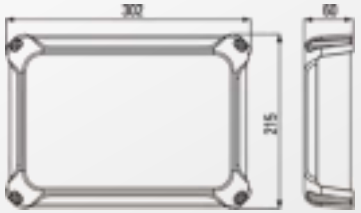

GM-D9701

Class-D Mono Amplifier with Bass Boost Remote

2400 W MAX.

Variable LPF RCA IN/OUT SPEAKER INPUT Bass Boost Remote 1ohm

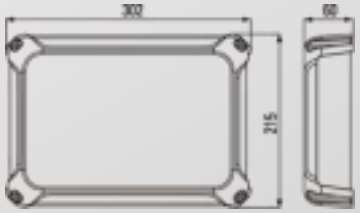

GM-D8704

Class-FD 4-Channel Bridgeable Amplifier with Bass Boost Remote

1200 W MAX.

Class FD Variable HPF Variable LPF RCA IN/OUT SPEAKER INPUT Bass Boost Remote 1ohm

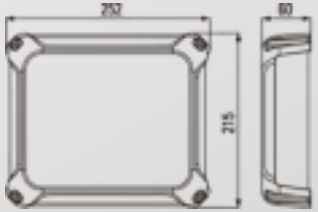

GM-D8701

Class-D Mono Amplifier with Bass Boost Remote

1600 W MAX.

Variable LPF RCA IN/OUT SPEAKER INPUT Bass Boost Remote 1ohm

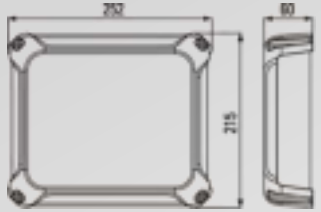

GM-D1004

Class-FD 4-Channel Amplifier

400W MAX.

Class FD LPF HPF RCA INPUT SPEAKER INPUT

Dimensions

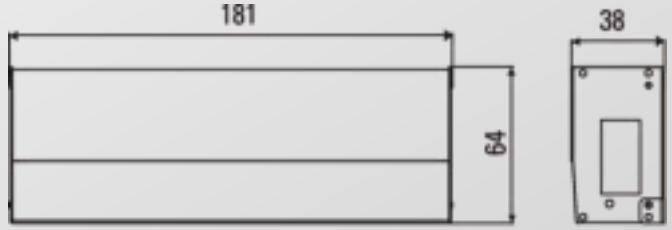

Key Selling Points

1. Compact design makes for easy installation behind the center console or inside the console box.
2. Achieves higher power output despite compact dimensions.
3. GM-D1004 incorporates various outstanding features including TVC (Total Vibration Control) Concept, Automatic Signal Sensing and Turn-ON, and others.

GM-A6704 4-Channel Bridgeable Amplifier with Bass Boost

1000 W MAX.

Variable LPF HPF RCA INPUT

SPEAKER INPUT Bass Boost

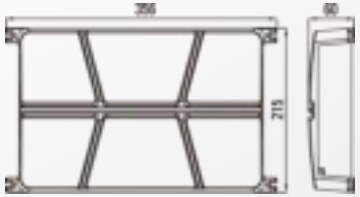

GM-A5702 2-Channel Bridgeable Amplifier with Bass Boost

1000 W MAX.

Variable LPF RCA INPUT SPEAKER INPUT

Bass Boost

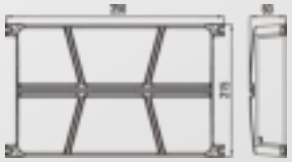

GM-A4704 4-Channel Bridgeable Amplifier

520 W MAX.

Variable LPF HPF RCA INPUT

SPEAKER INPUT

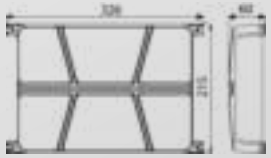

GM-A3702 2-Channel Bridgeable Amplifier

500 W MAX.

LPF RCA INPUT SPEAKER INPUT

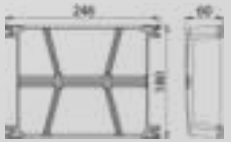

Key Selling Points

1. Higher power output contained in compact dimensions.
2. Outstanding features include Bass Boost, Automatic Signal Sensing & Turn-ON, and others.
3. Variable high pass filter (for high-frequency-range sound) enhances tuning flexibility and sonic clarity.

GM-E7004

4-Channel Bridgeable Amplifier with Bass Boost

1000 W MAX.

Variable LPF Variable HPF RCA INPUT

SPEAKER INPUT Bass Boost

GM-E7002

2-Channel Bridgeable Amplifier with Bass Boost

500 W MAX.

Variable LPF Variable HPF RCA INPUT

SPEAKER INPUT Bass Boost

Key Selling Points

1. Built for High Power, Energetic Sound — High output with the large-capacity electrolytic capacitors - Stable performance ensured with optimized PCB board
2. Flexibly sound tune as you like — Wide range, variable LPF & HPF for system flexibility, Two-step Bass Boost as a juice for more fun!
3. Easy install, Easy way to enjoy! RCA/Speaker level input compatible — Enjoy without changing radio or adding any converter

Subwoofers & Speakers

Amazing Quality in Every Sound You Love to Listen To

For 2022, Pioneer's subwoofer and speaker lineup lets you experience higher-quality sound in whatever kind of music turns you on. With so many great choices, you can select the most suitable speakers to reproduce your favorite kinds of sound.

- Z Series
- Champion Series
- D Series
- Special Edition Series
- A Series
- PRO Series
- R Series
- Subwoofers/Others
- G Series
- Marine

Z Series

High-Resolution Sound

Wider frequency range, resulting from the tweeter's optimal aluminum diaphragm shape and Vertex Drive System, enriches and expands sound field presence in the car cabin.
Dynamic range is widened, thanks to the speaker's light, rigid Aramid fiber cone, superior linearity and low distortion.

OPEN & SMOOTH™

Hi-Res AUDIO

TS-Z65CH* 330 W MAX.

16.5 cm Component Speaker Package

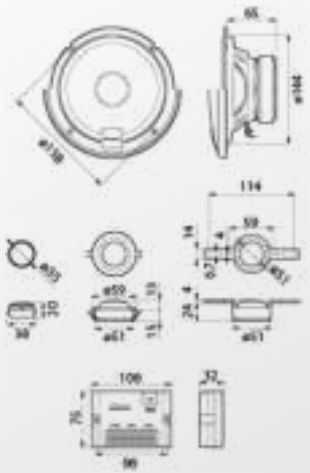

TS-Z65C* 300 W MAX.

16.5 cm Component Speaker Package

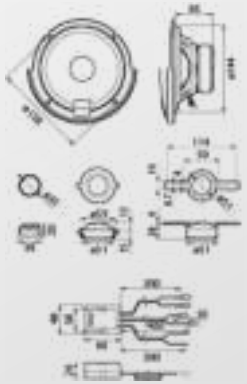

TS-Z65F** 330 W MAX.

16.5 cm 2-Way Speaker

TS-Z10LS4 1300 W MAX.

25 cm (10") Z-Series Component Subwoofer

4 Ω Single Voice Coil Type

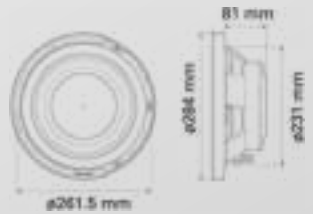

TS-Z10LS2 1300 W MAX.

25 cm (10") Z-Series Component Subwoofer

2 Ω Single Voice Coil Type

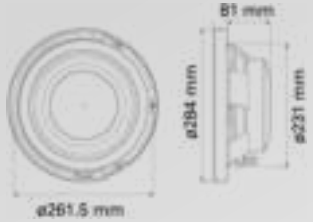

* Mesh grille included. Pair of woofer/tweeter/crossover network sets (for each of left and right speakers)
** Pair of speaker sets (for left and right)

D Series

Bold Sound & Wide Coverage

Aramid Fiber Interlaced IMPP™, Cone for rich linear bass sound.
Diverse lineup of speakers for installation in a wide range of cars.

OPEN & SMOOTH™

INJECTION MOLDED CONE™

TS-D65C* 270W MAX. 16.5 cm Component Speaker Package

* Mesh grille included. Pair of woofer/tweeter sets (for each of left and right speakers)

TS-D69C* 330W MAX. 6" x 9" Component Speaker Package

* Pair of speaker sets (for left and right)

TS-D65F* 270W MAX. 16.5 cm 2-Way Speaker

* Pair of speaker sets (for left and right)

TS-D69F* 330W MAX. 6" x 9" 2-Way Speaker

* Mesh grille included. Pair of speaker sets (for each of left and right speakers)

TS-D12D4/D2

2000 W MAX.

30 cm (12") D-Series Component Subwoofer

(TS-D12D4: 4 Ω Dual Voice Coil Type / TS-D12D2: 2 Ω Dual Voice Coil Type)

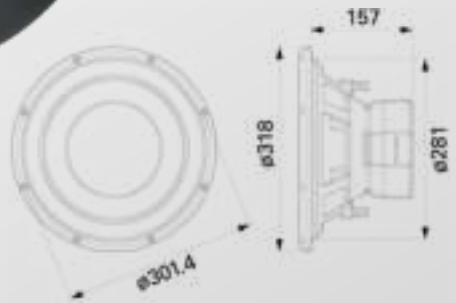

TS-D10LS4/S2

1300 W MAX.

25 cm (10") D-Series Component Subwoofer

(TS-D10LS4: 4 Ω Single Voice Coil Type/
TS-D10LS2: 2 Ω Single Voice Coil Type)

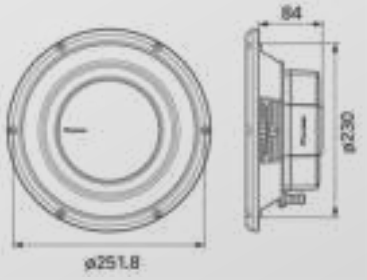

TS-D10D4/D2

1500 W MAX.

25 cm (10") D-Series Component Subwoofer

(TS-D10D4: 4 Ω Dual Voice Coil Type/
TS-D10D2: 2 Ω Dual Voice Coil Type)

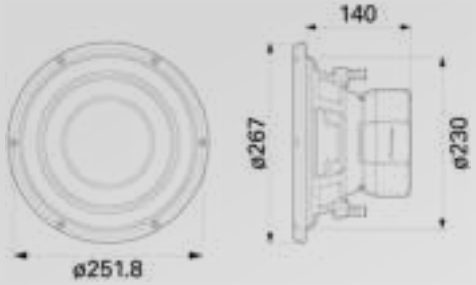

A Series

Richer Bass & Well-Controlled Sound

Carbon & Mica reinforced IMPP™ cone for deep and rich bass sound. Newly design adaptor offers a wider range of installation options and helps to ensure well-controlled sound.

OPEN & SMOOTH™

INJECTION MOLDED CONE™

TS-A1600A Cut View

Carbon & Mica Reinforced IMPP™ Cone

The new, rigid Carbon & Mica Reinforced IMPP cone and Elastic Polymer Surround provide quicker response and higher sensitivity. Produces deep and rich bass sound.

Elastic Polymer Surround

PET Center Cap

Large Sized Magnet ø85 x 15 mm

Newly Designed Adapter

Based on recent research data, the design of the A series adaptor has been changed to offer only a wider range of installation options, but also higher damping and improved sound.

16.5 cm Adapter

"Chocolate" crack shape for great balance between foldability & rigidity

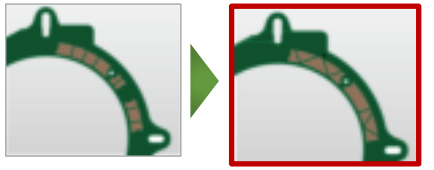

Rib-shape design based on topology analysis

10% strength increase!

TS-A1600A Cut View

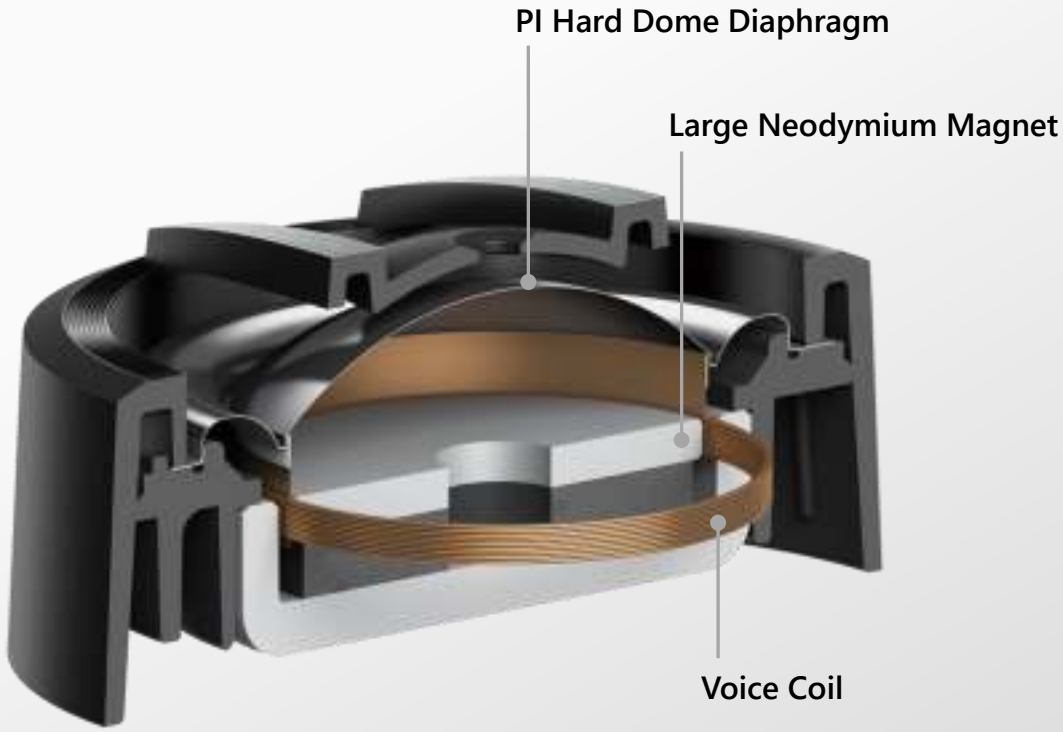

Super-Clear High Frequency Sound

Driven by a large neodymium magnet and the voice coil, the new TS-A1600C's PI dome tweeter achieves outstanding sound quality with especially clear highs.

Tweeter Frequency Response:
New TS-A1600C vs OEM Speaker

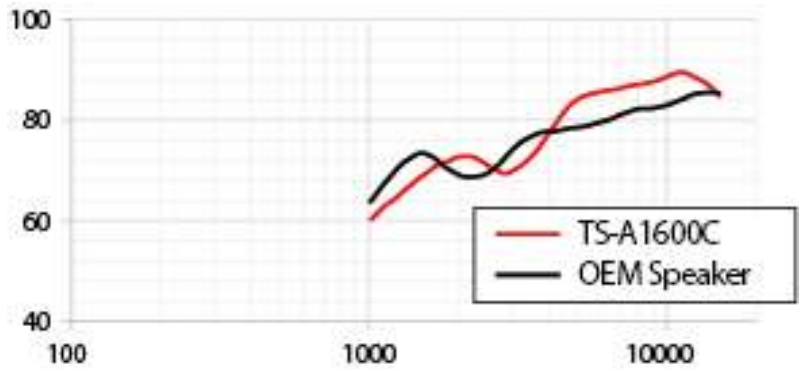

TS-A1600C 350 W MAX.

16.5 cm Component Speaker Package

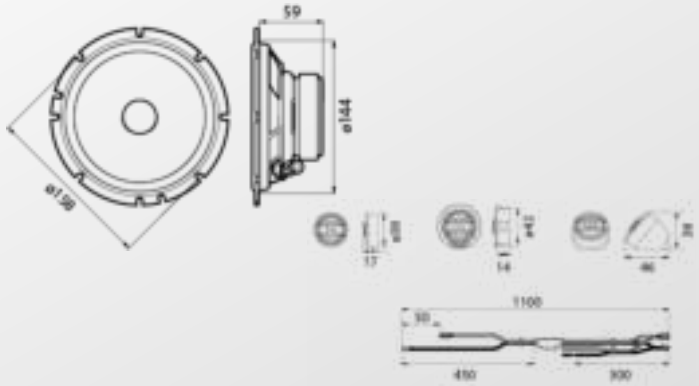

TS-A1687S 350 W MAX.

16.5 cm 4-Way Speaker

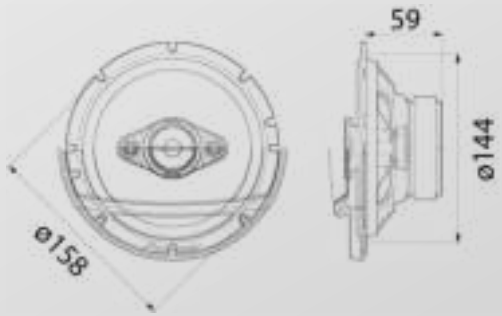

TS-A1677S 320 W MAX.

16.5 cm 3-Way Speaker

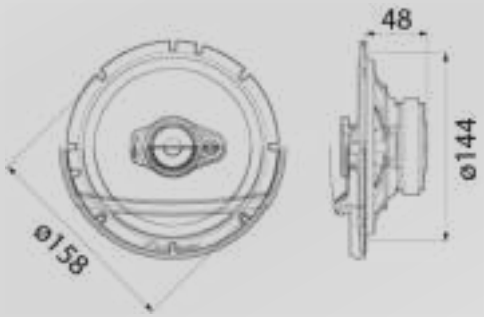

TS-A1300C

300 W MAX.

13 cm Component Speaker Package

TS-A2503i

420 W MAX.

25 cm 3-Way Speaker

TS-A1370F

300 W MAX.

13 cm 3-Way Speaker

TS-A2013I

500 W MAX.

20 cm 3-Way Speaker

TS-A6997S Cut View

Light & Rigid PEI cone
Its physicality improves sound clarity, and also features heat resistant.

Glass fiber and mica reinforced IMPP™ cone
Reduces deformation and distortion.

Elastomer Surround (like rubber)
Elastomer is higher rank material than urethane. Increases stability and linearity during high output.

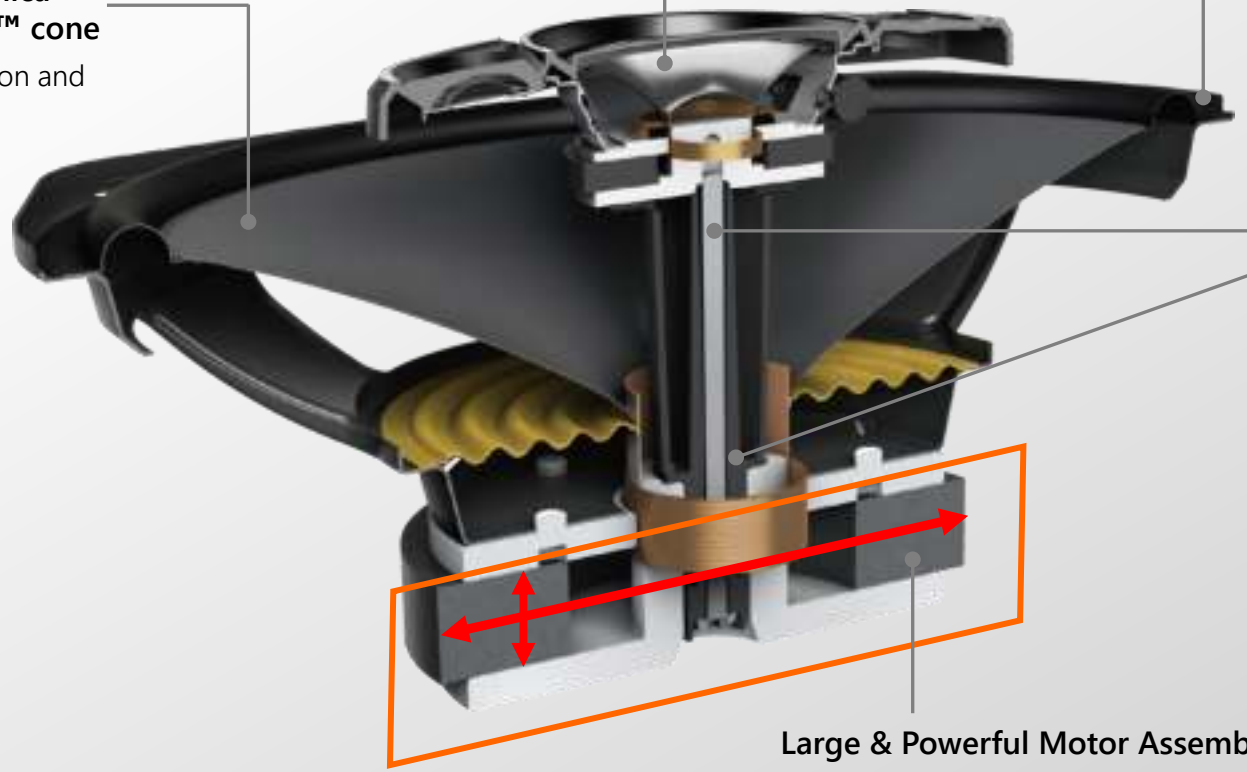

Reliable Fixing of High Range
Fixing of high range with screws and glue 100cm drop test-OK.

750W Max.
150W Nom!

Large & Powerful Motor Assembly
Heat dispersion is drastically improved and it features powerful driving force ,by adopting large magnet of the heaviest in this class.

TS-A6997S

750 W MAX.

6" x 9" 5-Way Speaker

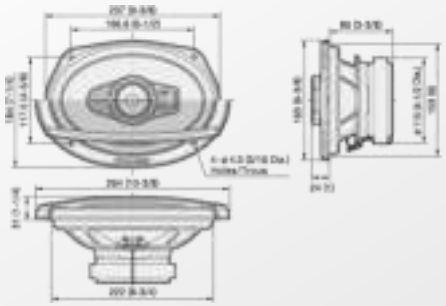

TS-A6987S

700 W MAX.

6" x 9" 5-Way Speaker

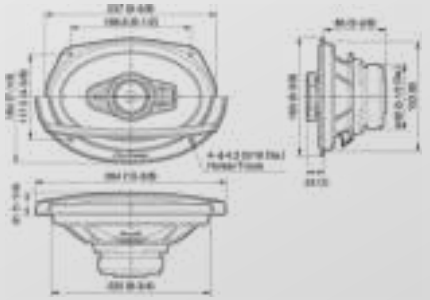

TS-A6977S

650 W MAX.

6" x 9" 4-Way Speaker

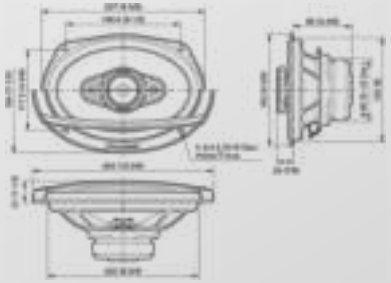

TS-A6967S

450 W MAX.

6" x 9" 4-Way Speaker

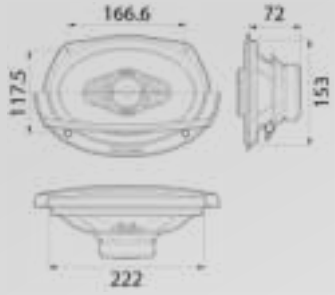

TS-A6887S 350 W MAX.

6" x 8" 4-Way Speaker

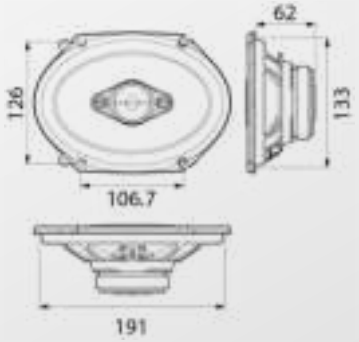

TS-A4670F 210 W MAX.

4" x 6" 4-Way Speaker

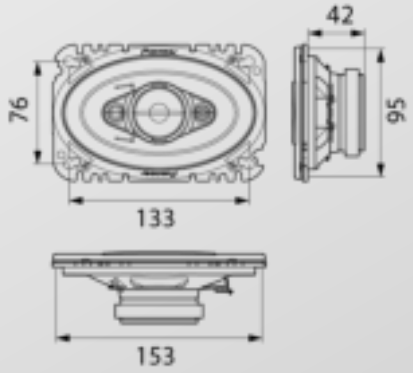

TS-A300TW 450 W MAX.

20 mm A-Series Tweeter

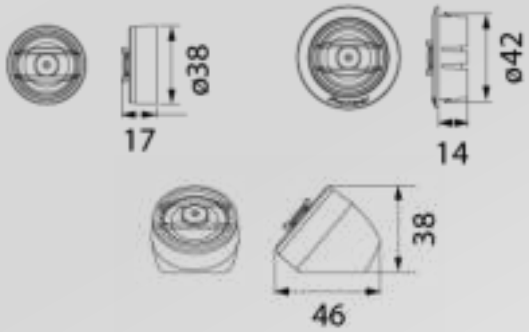

TS-A300D4/S4 1500 W MAX.

(TS-A300D4: 4 Ω Dual Voice Coil Type/
TS-A300S4: 4 Ω Single Voice Coil Type)

30 cm (12") A-Series Component Subwoofer

TS-A250D4/S4 1300 W MAX.

(TS-A250D4: 4 Ω Dual Voice Coil Type/
TS-A250S4: 4 Ω Single Voice Coil Type)

25 cm (10") A-Series Component Subwoofer

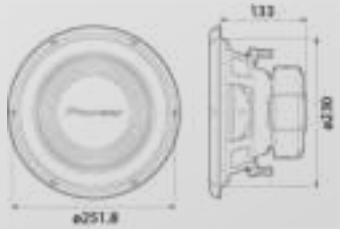

TS-A30S4 1400 W MAX.

30 cm (12") A-Series Component Subwoofer

TS-A25S4 1200 W MAX.

25 cm (10") A-Series Component Subwoofer

TS-A300B 1500 W MAX.

30 cm (12") Bass-Reflex Type Subwoofer

TS-A3000LS4

1500 W MAX.

30 cm (12") Shallow-Mount Component Subwoofer

TS-A2500LS4

1200 W MAX.

25 cm (10") Shallow-Mount Component Subwoofer

TS-A2000LD2

700 W MAX.

20 cm (8") Shallow-Mount Component Subwoofer

TS-A3000LB

1500 W MAX.

Preloaded 30 cm (12") Shallow Subwoofer Enclosure

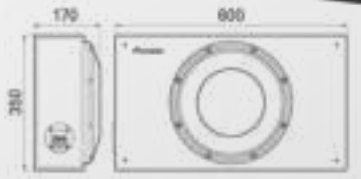

TS-A2500LB

1200 W MAX.

Preloaded 25 cm (10") Shallow Subwoofer Enclosure

TS-A2000LB

700 W MAX.

Preloaded 20 cm (8") Shallow Subwoofer Enclosure

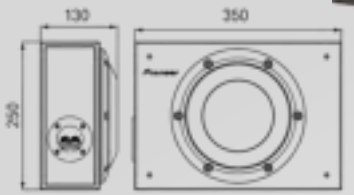

R Series

Loud & Aggressive

A combination of rigid mica and light pulp enable the cone to reproduce clear, energetic Loud & Aggressive sound.

High Sensitivity

MULTILAYER MICA MATRIX CONE™

TS-R1651S-2

300 W MAX. 16 cm 3-Way Speaker

High Sensitivity

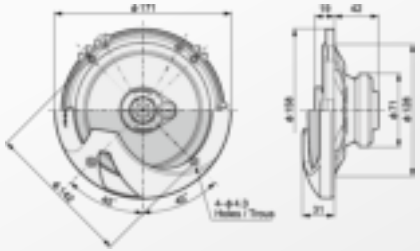

TS-R6951S

400 W MAX. 6" x 9" 3-Way Speaker

High Sensitivity

MULTILAYER MICA MATRIX CONE

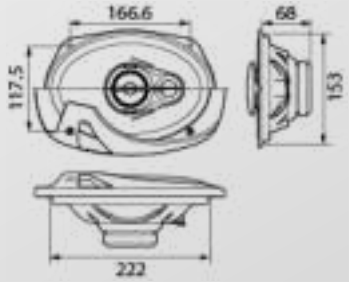

TS-R1350S

250 W MAX. 16 cm 3-Way Speaker

High Sensitivity

MULTILAYER MICA MATRIX CONE

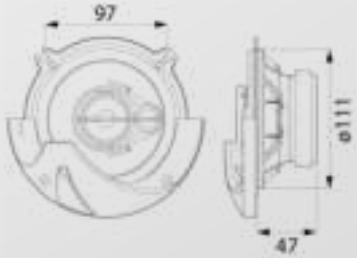

TS-R1051S

210 W MAX. 10 cm 3-Way Speaker

High Sensitivity

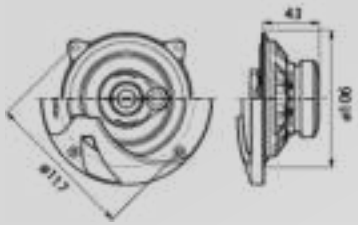

G Series

Well-Balanced Sound

Optimal sound reproduction features well-balanced combination of vocal and bass.

Wide Application

INJECTION MOLDED CONE™

TS-G1620F-2 Cut View

High-Quality Design & Dustproof

Fully Covered Mesh Design

New Design Grille & Flange

High-Impact Bass

High Rigidity PP Cone

High-Power & High-Impact Bass

Progressive Flex Suspension System (P.F.S.S) Spider

Longer Voice Coil Width

Long Stroke Yoke

High Sensitivity

Lighter PET Diaphragm

Natural High Frequency Response

Dielectric Piezo Tweeter

Wider Frequency Response Reduces Distortion

Copper Ring

TS-G160C-2

300 W MAX.

16 cm Component Speaker Package

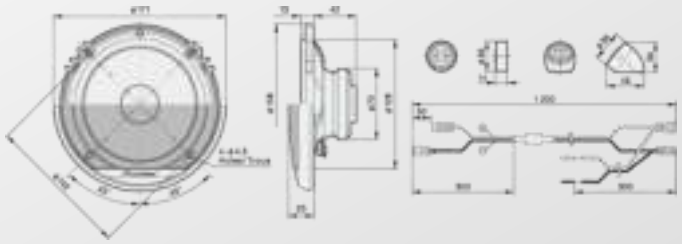

TS-G1620F-2

300 W MAX.

16 cm 2-Way Speaker

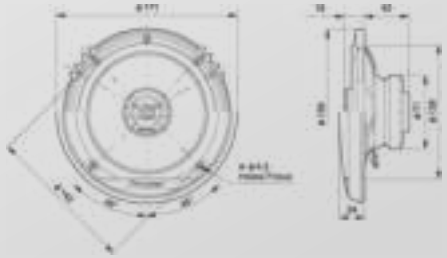

TS-G1610F-2

280 W MAX.

16 cm Dual-Cone Speaker

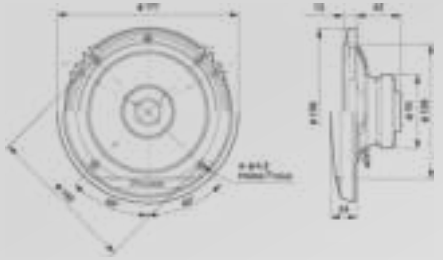

SUBWOOFERS & SPEAKERS

TS-G1020F 210W MAX.

10 cm 2-Way Speaker

TS-G1320F 250W MAX.

13 cm 2-Way Speaker

TS-G6930F 400W MAX.

6" x 9" 3-Way Speaker

TS-G1010F 190W MAX.

10 cm Dual-Cone Speaker

TS-G1310F 230W MAX.

13 cm Dual-Cone Speaker

TS-G4620S 300W MAX.

4" x 6" 2-Way Speaker

Champion Series

High Power & Forceful Bass

Tougher at handling more high power input at higher volume without compromising higher quality. Dual Spiders and Motor Assembly is the driving force of massive dynamic sound that's true to the Champion Series name.

Champion series

TS-7150F Cut View

Crisp Treble Sound

Large-Sized Mid-Range using Heat-Resistant PEI Cone

High-frequency sensitivity is increased with the use of a newly designed 66 mm mid-range speaker.

Fully Covered Mesh Grille

Forceful Bass

Low Distortion

Kenaf Reinforced Rigid Pulp Cone

The combination of kenaf mixed pulp material, press formation process, and CAE technology for maintaining rigid shape is essential for realizing forceful bass and minimal sound distortion.

Forceful Bass

High-Power Handling

Dual Spiders

Dual Spiders supporting the voice coil effectively dampen large cone vibration and enhance linearity of sound reproduction.

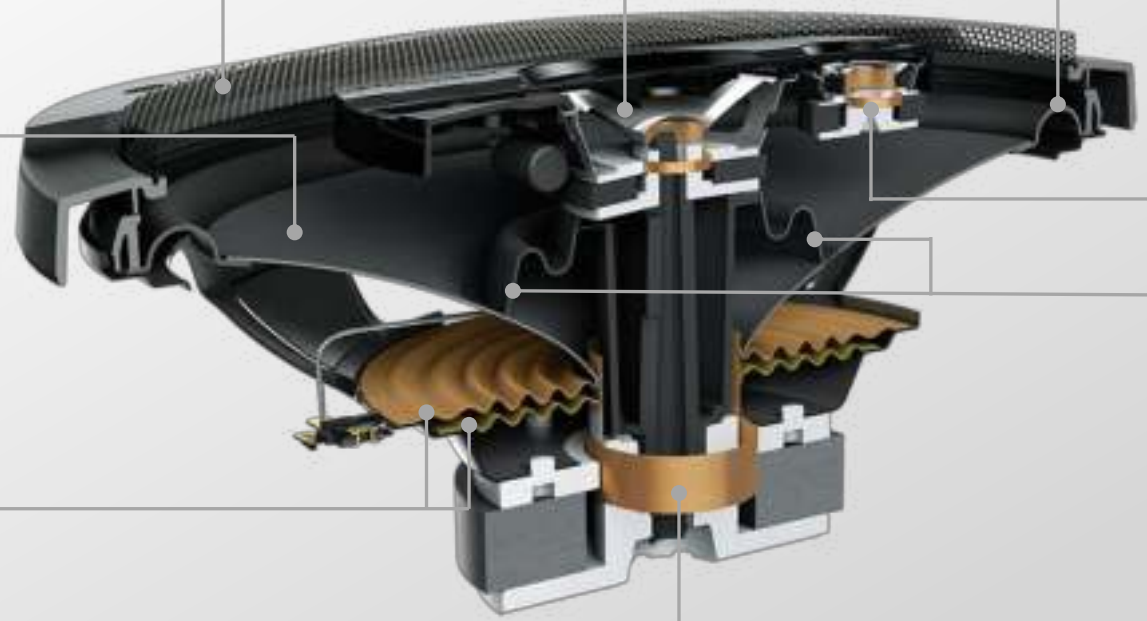

High-Compliance Urethane Rolled Edge

30 mm Tweeter

Perfect Dust Protection

ø35 mm Large Diameter Long Voice Coil

TS-7150F 500 W MAX. 7" x 10" 5-Way Champion Series Speaker

Champion series

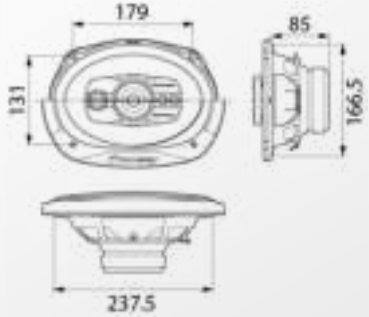

TS-6975 V3 550 W MAX. 6" x 9" 3-Way Champion Series Speaker

Champion series

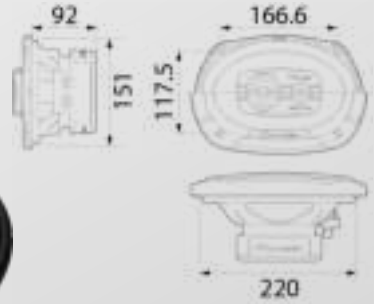

TS-1675 V2 300 W MAX. 16 cm* 3-Way Champion Series Speaker

Champion series

* 16 cm installation size speaker actually contains 17 cm cone size for more powerful sound.

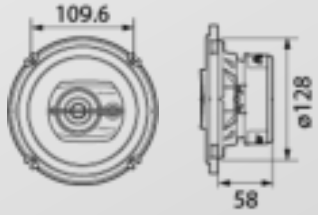

TS-6965 V3 450 W MAX. 6" x 9" 3-Way Champion Series Speaker

Champion series

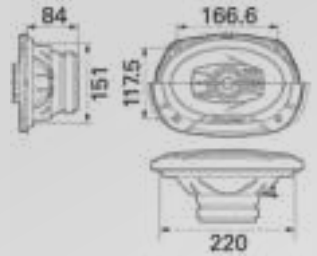

TS-7150F 500 W MAX. 7" x 10" 5-Way Champion Series Speaker

Champion series

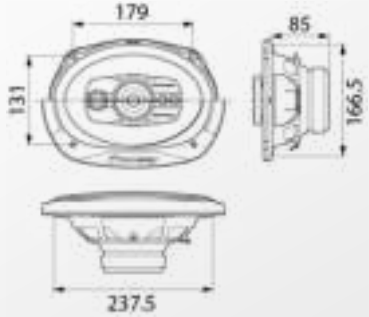

TS-6975 V3 550 W MAX. 6" x 9" 3-Way Champion Series Speaker

Champion series

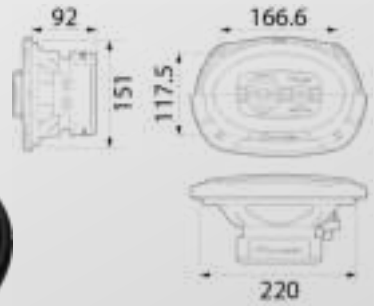

TS-1675 V3 500 W MAX. 16 cm* 3-Way Champion Series Speaker

Champion series

* 16 cm installation size speaker actually contains 17 cm cone size for more powerful sound.

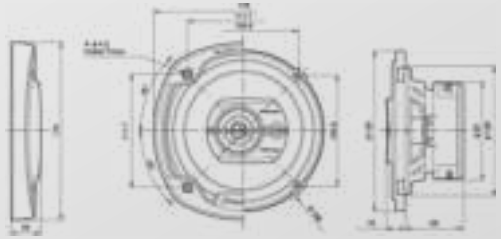

TS-6965 V3 450 W MAX. 6" x 9" 3-Way Champion Series Speaker

Champion series

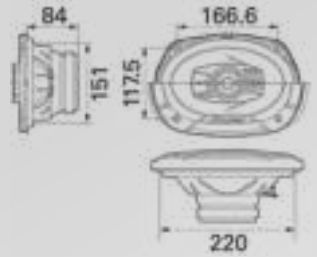

TS-W312D4 Cut View

Hexagonal Shape with Big Center Cap

Its physicality realize deep bass and rigid shape.

Light & Rigid Seamless Cone

Lightweight and high rigidity improves louder sound.

Hybrid Surround

Dual layer surround (elastic polymer & Fiber) realizes high durability.

Firmly Enclose Basket Optimized Structure

Support bass reproduction by increase inner loss.

1600W Max.

500W Nom!

Large & Powerful Motor Assembly

Heat dispersion is drastically improved and it features powerful driving force ,by adopting large magnet of the heaviest in this class.

TS-W3003D4

2000 W MAX.

30 cm (12") Champion Series Subwoofer

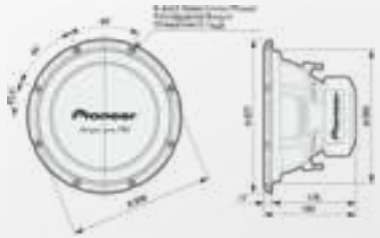

TS-W312D4/S4

1600 W MAX.

30 cm (12") Champion Series Subwoofer

(TS-W312D4: 4 Ω Dual Voice Coil Type/
TS-WS3124: 4 Ω Single Voice Coil Type)

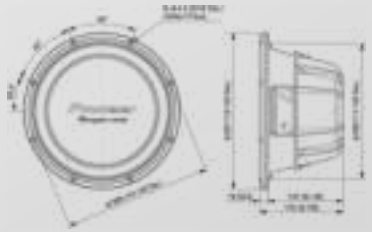

TS-W32S4

1500 W MAX.

30 cm (12") Champion Series Subwoofer

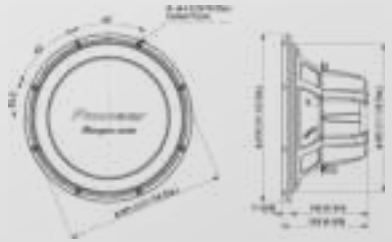

TS-WX3000T

1600 W MAX.

30 cm (12") Bass-Reflex Tube Champion Series Subwoofer

Special Edition Series

It’s Pioneer High-Resolution World

"High resolution" to Realize Super Realistic Feeling,
Expressing the vividness of the performer playing in
front of you.

Hi-Res AUDIO

Special Edition Series Overall Concept

High Resolution Sound & Easy Installation

Hi-Res AUDIO

1 High Resolution Sound

Complete Pioneer High-Resolution Sound System to realize super realistic sound quality.

2 Special Edition Series, Designed in Japan

Improved design and appearance of speaker, customized for ASEAN. Aluminum die-cast basket, big-size crossover networks, and big tweeters.

3 Plug & Play for Easy Installation

Multi fit adaptor and multi fit connector (TS-V170C,TS-J170C)

TS-VR170C

300 W MAX. 17 cm Component Speaker Package

Flagship Special Edition

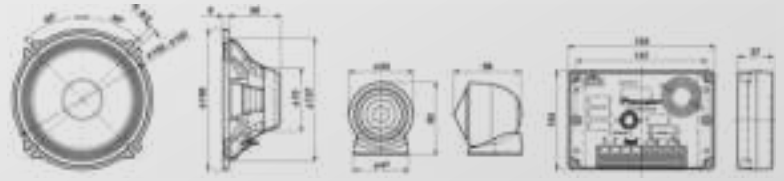

TS-V170C

280 W MAX. 17 cm Component Speaker Package

High Fidelity Special Edition

TS-J170C

260 W MAX. 17 cm Component Speaker Package

High Performance Special Edition

PRO Series

Louder Sound, More Fun for Open Show

Pioneer PRO series is designed for enthusiasts who are looking for loud sound and great sound pressure.
Sound driven with higher power, sensitivity and passion for the world to hear.

PRO
PIONEER
REFERENCE FOR
OPEN SHOW

SUBWOOFERS & SPEAKERS

TS-W3020PRO 3500 W MAX.

30 cm (12") High-Efficiency Subwoofers

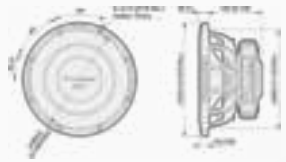

TS-M800PRO 700 W MAX.

20 cm (8") Midbass

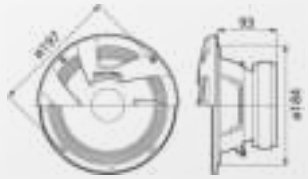

TS-6900PRO 600 W MAX.

6" x 9" 2-Way Speaker

TS-M650PRO 500 W MAX.

17 cm (6.5") Midbass

TS-B400PRO 500 W MAX.

10 cm (4") Bullet Tweeter

TS-B350PRO 250 W MAX.

8.7 cm (3.5") Bullet Tweeter

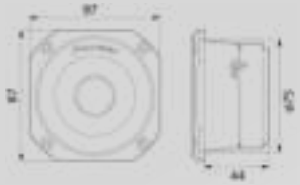

Subwoofers / Others

SUBWOOFERS & SPEAKERS

TS-WX70DA

200 W MAX.* * Output power

16 cm x 2 PP Cone Active Subwoofer with Built-in Class-D Amplifier

DIGITAL BASS™ CONTROL

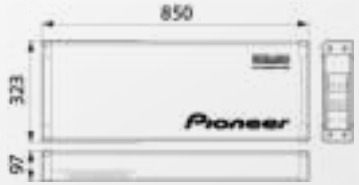

TS-WX400DA

250 W MAX.* * Output power

24 cm x 14 cm Sealed Active Subwoofer with Built-in Class-D Amplifier

DIGITAL BASS™ CONTROL

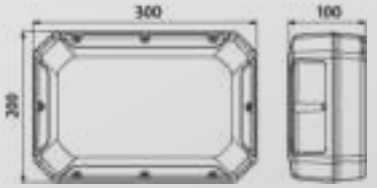

TS-WX130DA

160 W MAX.* * Output power

20 cm (8") Sealed Active Subwoofer with Built-in Class-D Amplifier

DIGITAL BASS™ CONTROL

TS-WX130EA

160 W MAX.* * Output power

20 cm (8") Sealed Active Subwoofer with Built-in Class-D Amplifier

TS-WX010A

160 W MAX.

17 cm x 8 cm Compact Active Foot-Space Subwoofer

BASS SOUND CREATOR

SUBWOOFERS & SPEAKERS

TS-WX300TA

1300 W MAX.

30 cm (12") Bass-Reflex Tube Type Active Subwoofer

1300 W MAX.

TS-WX300A

1300 W MAX.

30 cm (12") Bass-Reflex Box Type Active Subwoofer

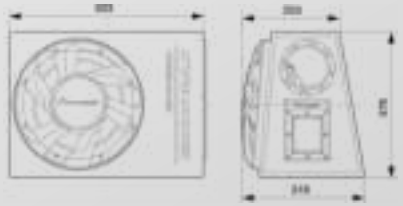

TS-WX306T

1300 W MAX.

30 cm (12") Bass-Reflex Tube Type Subwoofer

INJECTION MOLDED CONE™ VCCS™

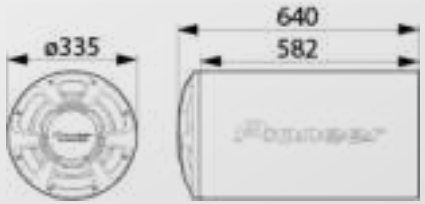

TS-WX306B

1300 W MAX.

30 cm (12") Sealed Enclosure Type Subwoofer

INJECTION MOLDED CONE™ VCCS™

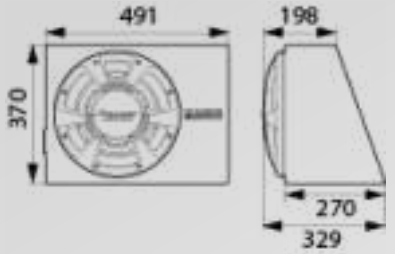

SUBWOOFERS & SPEAKERS

TS-WX1220AH

1200 W MAX.* * Output power

30 cm (12") x 2 Bass-Reflex Type Active Subwoofer with Built-in Class-D Amplifier

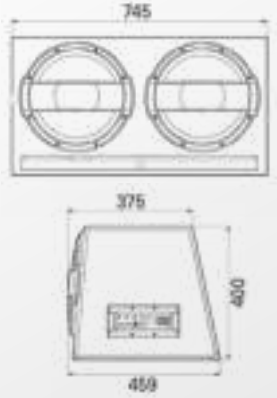

TS-WX1210AH

600 W MAX.* * Output power

30 cm (12") x 2 Bass-Reflex Type Active Subwoofer with Built-in Class-D Amplifier

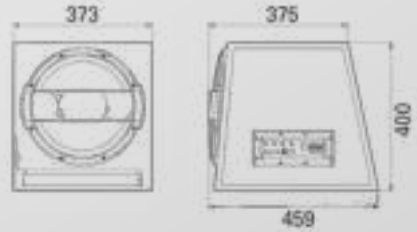

TS-WX1010LA

600 W MAX.* * Output power

25 cm (10") Sealed Active Subwoofer with Built-in Class-D Amplifier

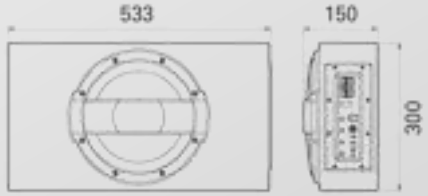

TS-WH500A

150 W MAX.* * Output power

18 cm x 10 cm x 2 HVT Sealed Active Subwoofer

HVT™

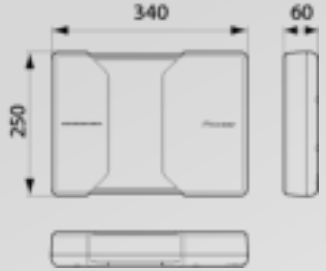

TS-F1634R 200 W MAX. 16 cm 2-Way Speaker

TS-F1034R 150 W MAX. 10 cm 2-Way Speaker

TS-S250 250 W MAX. 40 mm High-Power Tune-Up Tweeter

TS-S20 200 W MAX. 20 mm Component Hard-Dome Tweeter

Marine Products

Fantastic Audio for a Special Time

Featuring true sound reproduction, superior-quality audio entertainment and advanced technologies honed over decades to excel in the challenging ambient conditions inside automobiles, Pioneer marine products deliver exquisite sound and limitless fun to people who spend time on the water. With proprietary technologies and products proved and tested in marine environments, Pioneer is confident in our promise to ensure customer satisfaction in many, many special time.

TS-ME650FC

250 W MAX.

6.5" Marine 2-Way Speaker

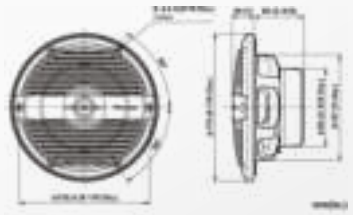

TS-ME770FC

250 W MAX.

7.7" Marine 2-Way Speaker

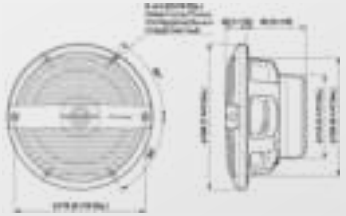

TS-ME100WC

900 W MAX.

10" Marine Component Subwoofer

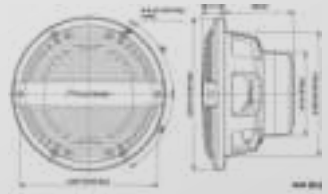

TS-ME650FS

250 W MAX.

6.5" Marine 2-Way Speaker

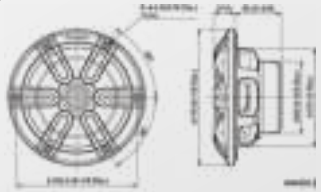

TS-ME770FS

250 W MAX.

7.7" Marine 2-Way Speaker

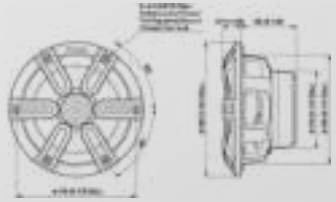

TS-ME100WS

900 W MAX.

10" Marine Component Subwoofer

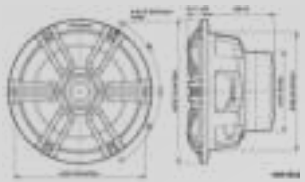

TS-ME770TC

250 W MAX.

7.7" Marine Tower Speaker

TS-MR1640

250 W MAX.

6.5" Marine 2-Way Speaker

TS-MR2040

200 W MAX.

8" Marine 2-Way Speaker

TS-ME770TSW/TSB

250 W MAX.

7.7" Marine Tower Speaker

TS-MR1600

250 W MAX.

6.5" Marine Dual-Cone Speaker

GM-ME500X1

1600 W MAX.

Marine Mono Amplifier

Recommended Product Bundling

Summary of Recommended Combination

For Asia

Grade	Concept	AV Receivers	Speakers [front]	Speakers [Rear]	Amplifiers [1]	Subwoofer	Amplifiers [2]
Flagship ★★★★★	Hi-Res Audio, Realizing the Super-Realistic Sound, Bass Depth, Dynamic, and Punchy Sound.	DMH-ZF9350BT DMH-ZS9350BT DMH-Z6350BT	TS-VR170C	TS-Z65F	GM-DX874	TS-Z10LS4	GM-D9701
Superior ★★★★★	Superior High Fidelity Sound with Powerful Bass.	DMH-ZF8550BT DMH-Z53505BT	TS-VR170C	TS-Z65F	GM-DX874	TS-W312D4	GM-D8701
Dynamic ★★★★★	Powerful, Deep Bass Sound, Rich Music Instrument Sound Reproduction.	DMH-A5450BT DMH-A4450BT	TS-J170C	TS-D65F	GM-D8704	TS-WX400DA	—
Enhanced ★★★★★	Energetic Treble Live Sound, Rich Midrange Reproduction.	DMH-AF555BT DMH-A345BT AVH-A245BT	TS-A1600C	TS-A1677S	GM-A6704	TS-WX130DA	—
Affordable ★★★★★	Easily Customizing Your Car to Enjoy Music.	AVH-G225BT DMH-G225BT	TS-G160C-2	TS-G1620F-2	GM-A4704	TS-WX130EA	—

Recommended Product Bundling

Flagship

Hi-Res Audio, Realizing the Super-Realistic Sound, Bass Depth, Dynamic, and Punchy Sound.

Recommended Product Bundling

Superior

Superior High Fidelity Sound with Powerful Bass.

AV Receivers

DMH-ZF8550BT

DMH-Z5350BT

Amplifiers

GM-DX874

100 W x 4 @4-ohm

GM-D8701

500 W x 1 @2-ohm

Speakers

TS-V170C

Front

Nominal 60 W

TS-Z65F

Rear

RMS 110 W

Subwoofer

TS-W312D4

RMS 500 W

Recommended Product Bundling

Dynamic

Powerful, Deep Bass Sound, Rich Music Instrument Sound Reproduction.

AV Receivers

DMH-A5450BT

DMH-A4450BT

Amplifier

GM-D8704

100 W x 4 @4-ohm

Speakers

TS-J170C

Front

Nominal 45 W

TS-D65F

Rear

RMS 90 W

Subwoofer

TS-WX400DA

Nominal 100 W

Recommended Product Bundling

Enhanced

Energetic Treble Live Sound, Rich Midrange Reproduction.

AV Receivers

DMH-AF555BT

DMH-A345BT

AVH-A245BT

Amplifier

GM-A6704

60 W x 4 @4-ohm

Speakers

TS-A1600C

Front

RMS 80 W

TS-A1677S

Rear

RMS 70 W

Subwoofer

TS-WX130DA

Nominal 50 W

Recommended Product Bundling

Affordable

Easily Customizing Your Car to Enjoy Music.

AV Receivers

AVH-G225BT

DMH-G225BT

Amplifier

GM-A4704

40 W x 4 @4-ohm

Speakers

TS-G160C-2

Front

Nominal 45 W

TS-G1620F-2

Rear

Nominal 40 W

Subwoofer

TS-WX130EA

Nominal 50 W

SPECIFICATIONS

SYMBOLS FOR SPECIAL FEATURES

Amplifier

Variable HPF	Variable High Pass Filter	RCA IN/OUT	RCA input/Output	Bass Boost Remote	Bass Boost Remote
Variable LPF	Variable Low Pass Filter	RCA INPUT	RCA Input	Class FD	Class FD
HPF	High Pass Filter	SPEAKER INPUT	Speaker Level Inputs	1ohm	1 Ohm Load Impedance
LPF	Low Pass Filter	Bass Boost	Bass Boost	Hi-Res AUDIO	Hi-Resolution Audio

Subwoofer & Speaker

IMPP™ CONE	IMPP™ (Injection-Molded Polypropylene) Composite Cone
IPX7	IPX7 Water Resistant

NOTES:

- PIONEER, MIXTRAX, and AppRadio are trademarks or registered trademarks of Pioneer Corporation.
- The Bluetooth® word mark and logos are registered trademarks owned by the Bluetooth SIG, Inc. and any use of such marks by PIONEER CORPORATION is under license. Other trademarks and trade names are those of their respective owners.
- DivX®, DivX Certified® and associated logos are trademarks of DivX, Inc. and are used under license. Playback of a DivX® file in an external storage device (USB Device/SD Memory Card) may initially be slightly delayed or not proceed smoothly, depending on file size or bit rate.
- Dolby, Pro Logic and the double-D symbol are registered trademarks of Dolby Laboratories.
- Apple, the Apple logo, iPhone, iPod, iTunes, Lightning and Siri are trademarks of Apple Inc., registered in the U.S. and other countries. Apple CarPlay is a trademark of Apple Inc.
- App Store is a service mark of Apple Inc., registered in the U.S. and other countries.
- IOS is a trademark or registered trademark of Cisco in the U.S. and other countries and is used under license.
- Google, Android, Google Play, Android Auto and other marks are trademarks of Google LLC.

continues

Pioneer